JVC

SERVICE MANUAL

14" (34 cm) COLOUR TV

C-1480EK

BASIC CHASSIS
BX-II

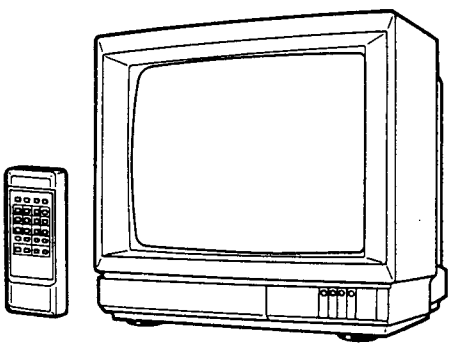

CONTENTS

- SAFETY PRECAUTIONS 2
- WARNING 2
- FEATURES 3
- OPERATING INSTRUCTIONS 3
- TECHNICAL INFORMATION 4
- SPECIFIC SERVICE INSTRUCTIONS 5
- SERVICE ADJUSTMENT 6
- PARTS LIST 11

* SCHEMATIC DIAGRAM (APPENDED)

SPECIFICATIONS

Item	Content	Item	Content
Dimensions	37.0 cm (W) × 37.8 cm (D) × 34.1 cm (H)	ANT. Input Impedance	75Ω Unbalanced
Weight	10.2 kg		
TV System & Colour System		Power Input	240 VAC 50 Hz
TVRF System	CCIR (I)	Power Consumption	70 W (max.)/50 W (Avg.)
Colour System	PAL	Picture Tube Viewable	14" (34 cm) In-line Type
TV Receiving Channels & Frequency		Picture Size	21.1 cm (H) × 28.1 cm (W)
		High Voltage	24 kV ±1 kV (At zero beam Current)
UHF Band	(21 CH ~ 69 CH): 470 MHz ~ 862 MHz	Speaker	8 cm Round Type, 8Ω
Intermediate Frequency		Audio output	2 W (Effective output) 3 W (Music power)
Video IF Carrier	39.5 MHz	Tube	1
Sound IF Carrier	33.5 MHz (6.0 MHz)	IC	12 (In TV), 1 (In REMOCON)
Colour Sub Carrier	4.43 MHz	Transistor	35 (In TV), 2 (In REMOCON)

(Design and specifications subject to change without notice)

COPYRIGHT ©1989VICTOR COMPANY OF JAPAN, LTD.

No. 50226
Apr. 1989

SAFETY PRECAUTIONS

1. The design of this product contains special hardware and many circuits and components specially for safety purposes. For continued protection, no changes should be made to the original design unless authorized in writing by the manufacturer. Replacement parts must be identical to those used in the original circuits. Service should be performed by qualified personnel only.
2. Alterations of the design or circuitry of the product should not be made. Any design alterations or additions will void the manufacturer's warranty and will further relieve the manufacturer of responsibility for personal injury or property damage resulting therefrom.
3. Many elecrical and mechanical parts in the product have special safety-related characteristics. These characteristics are often not evident from visual inspection nor can the protection afforded by them necessarily be obtained by using replacement components rated for higher voltage, wattage, etc. Replacement parts which have these special safety characteristics are identified in the Parts List of Service Manual. Electrical components having such features are identified by shading on the schematics and by (⚠) on the Parts List in the Service Manual. The use of a substitute replacement which does not have the same safety characteristics as the recommended replacement parts shown in the Parts List of Service Manual may create shock, fire, or other hazards.
4. The leads in the products are routed and dressed with ties, clamps, tubings, barriers and the like to be separated from live parts, high temperature parts, moving parts and/or sharp edges for the prevention of electric shock and fire hazard. When service is required, the original lead routing and dress should be ovserved, and it should be confirmed that they have been returned to normal, after re-assembling.

WARNING

1. This equipment has been designed and manufactured to meet international safety standards.
2. It is the legal responsibility of the repairer to ensure that these safety standards are maintained.
3. Repairs must be made in accordance with the relevant safety standards.
4. It is essential that safety critical components are replaced by approved parts.
5. If mains volage selector is provided, check setting for local voltage.

FEATURES

- Sub power supply circuit has been eliminated by using the main switch circuit of power-source circuit to supply power to 12 V power source for microcomputer and −30 V power source for memory.
- V. HOLD and H. HOLD are deleted as a result of employment of IC with built-in deflection circuit that adopts the count-down method for V./H. OSC.
- Newly incorporated is an off-timer with functions of max. 2-hour time setting in 30-min. units and of time remaining indication.
- An on-timer also offers max. 24-hour time setting in 1-hour units plus time remaining indication function.
- Multifunction remote-control system enables control via the hand held remote commander, of many of the receiver's functions.
- Adoption of module board with highly simplified circuit structure.
- Auto search circuit included in channel-selection circuit.

OPERATING INSTRUCTIONS

INFORMATION

Refer to the explanation leaflet inserted between Page 2 and 3 of Service Manual for details of handling.

TECHNICAL INFORMATION

CIRCUIT ANALYSIS

• BLOCK DIAGRAM

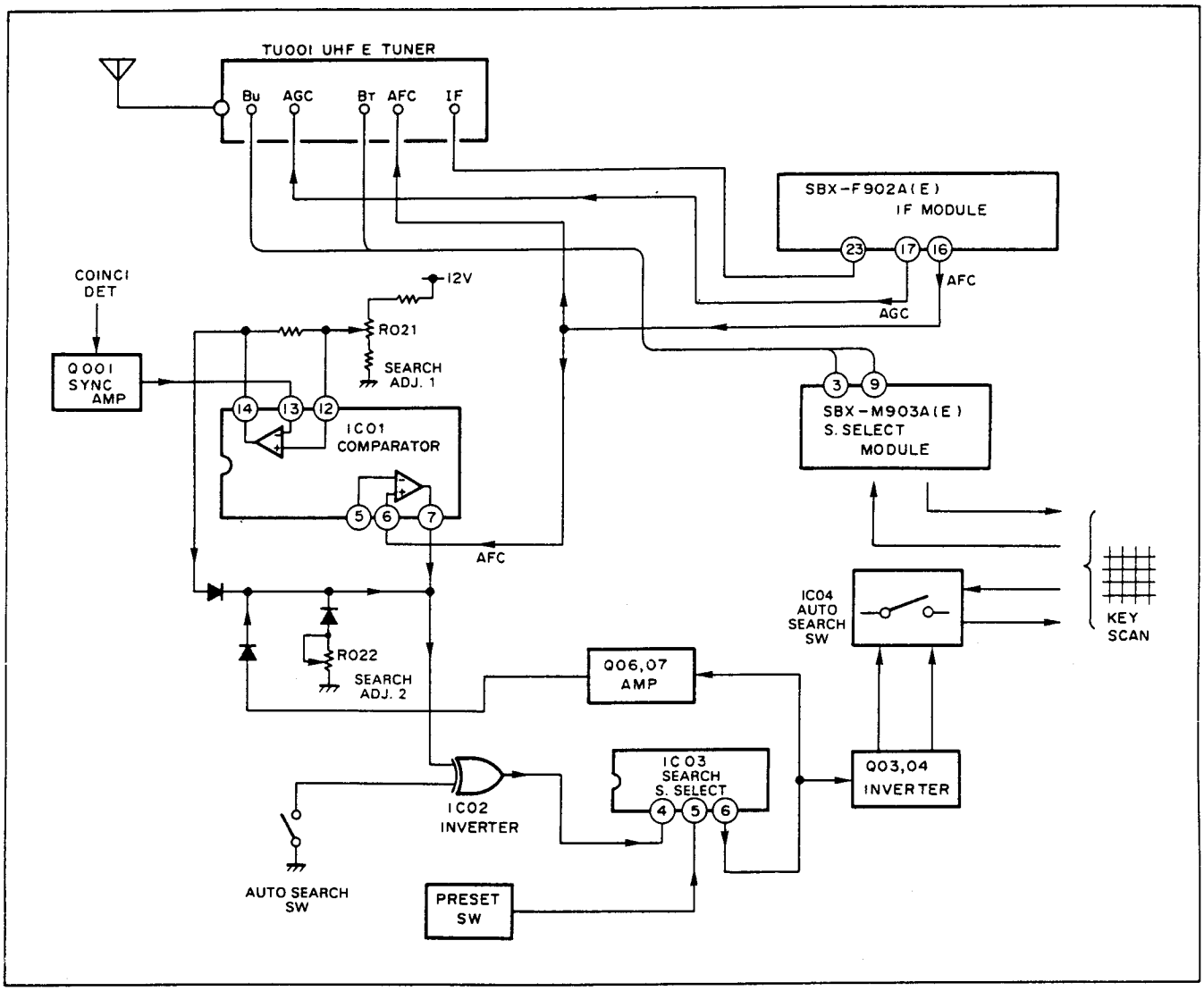

■ REGARDING AUTO SEARCH:

1. An auto search circuit has been added to the tuner channel selection circuit to realize speed-varying operations on a level with TTL.
2. The auto search section has the following circuit structure:
   a) Op-Amp circuit with phase correction.
   b) Exclusive OR Gate circuit.
   c) Duplex J-K flip-flop circuit.
   d) Bi-directional switch circuit.

SPECIFIC SERVICE INSTRUCTIONS

DISASSEMBLY PROCEDURE

■ REMOVING REAR COVER

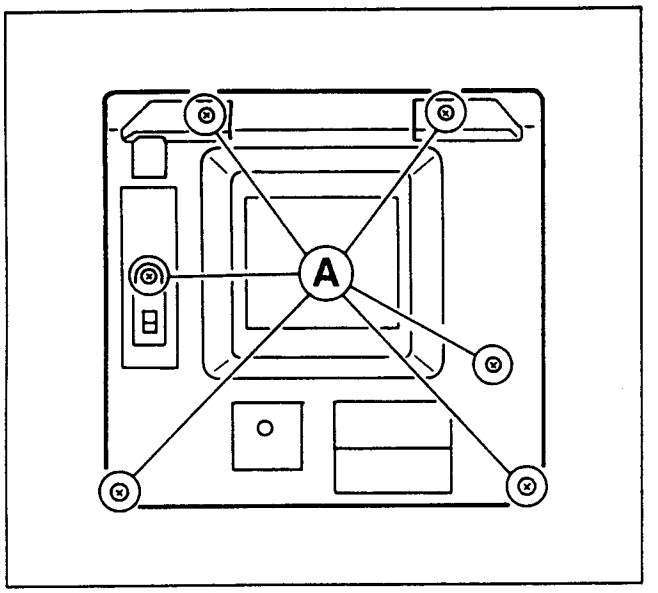

Fig. A

1. Unplug the power supply cord and remove the six screws Ⓐ shown in Fig. A.

★ When reinstalling the rear cover, carefully push it inward after inserting the main PC board into the rear cover groove.

■ REMOVING MAIN PC BOARD

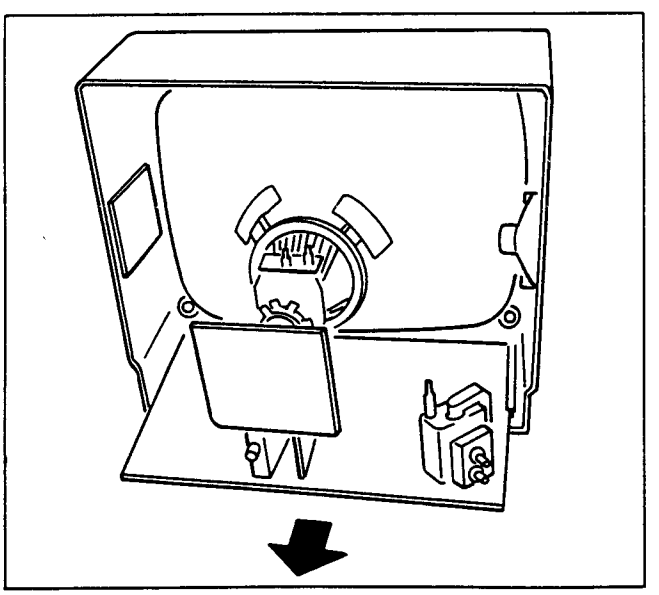

Fig. B

1. Withdraw the PC board backward along the rail. (Fig. B)

★ When conducting a check with power supplied, be sure to confirm that the CRT earth wire is connected to the CRT socket board and the chassis.

■ SETTING UP CHASSIS FOR CHECK/REPAIR

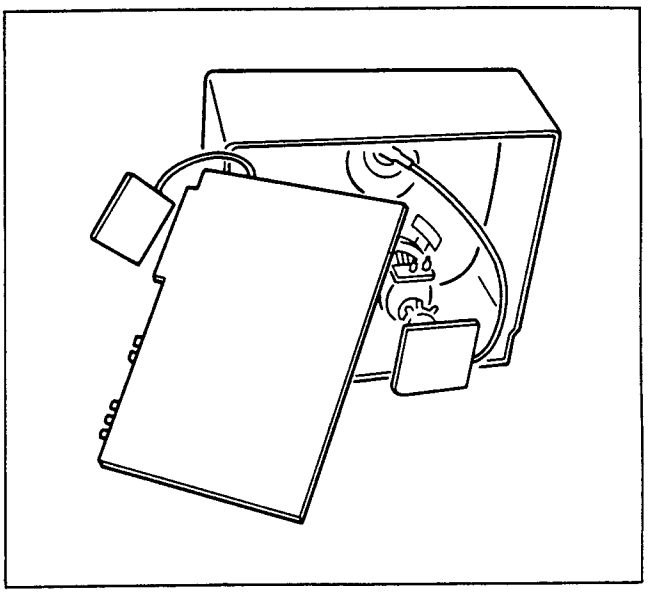

Fig. C

1. As shown in Fig. C, set the removed chassis upright.

★ When conducting a check with power supplied, be sure to confirm that the CRT earth wire is connected to the CRT socket board and the chassis.

■ WIRE CLAMPING AND CABLE TIES

1. Be sure to clamp the wire.
2. Never remove the cable tie used for tying the wires together. Should it be inadvertently removed, be sure to tie the wires with a new cable tie.

SERVICE ADJUSTMENT

MEASURING INSTRUMENTS

- DC VOLTMETER
- OSCILLOSCOPE
- PATTERN GENERATOR (PAL)

ALIGNMENT LOCATION

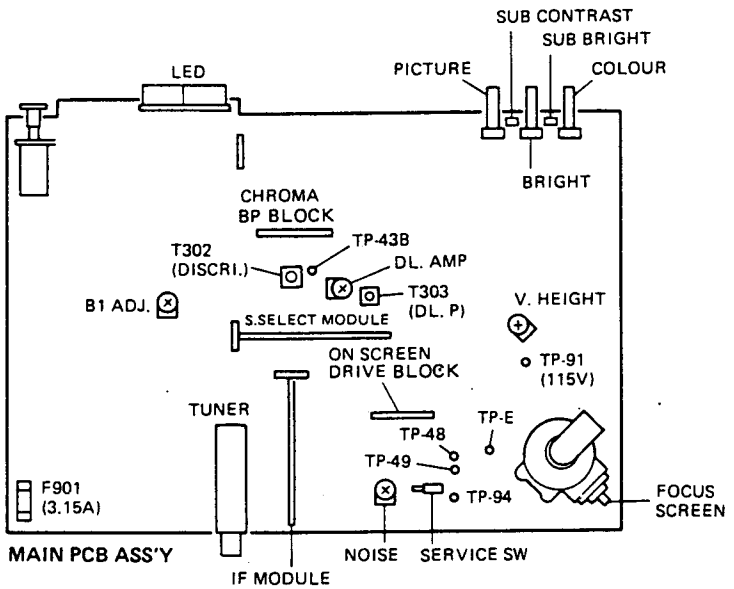

MAIN PCB ASS'Y

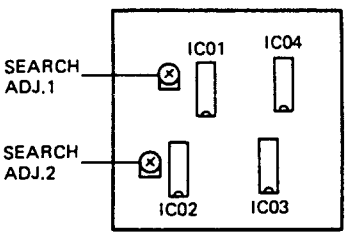

AUTO SEARCH PCB ASS'Y

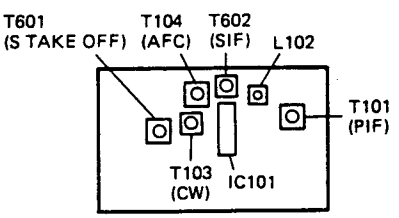

IF MODULE PCB ASS'Y

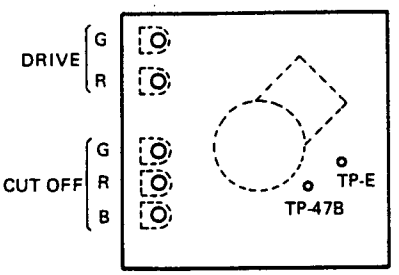

CRT SOCKET PCB ASS'Y

ADJUSTMENT

MAIN CIRCUIT

Item	Measuring instrument	Test point	Adjustment part	Description
B_1 POWER SUPPLY	DC Voltmeter	TP-91	B_1 ADJ VR	Adjust the B_1 ADJ VR to obtain DC 115 V between TP-91 and TP-E (⏚).
NOISE (RF A.G.C. Delay)			NOISE VR	This control is set at the factory and rarely requires any adjustment. If a snowy picture appears on a medium to weak-signal station, adjust the NOISE VR. 1. Turn NOISE VR fully clockwise (or counterclockwise) to obtain maximum noise in picture. 2. Slowly turn NOISE VR counterclockwise (or clockwise) until snow or noise in picture just disappears. • **NOTE** Check operation on strong channels. If overloading occurs (bending, poor colour, loss of colour sync., etc.) make compromise adjustment.
CHROMA CIRCUIT	• Oscilloscope • Pattern Generator (PAL)	TP-48 (Y-axis) TP-49 (X-axis)	DL AMP DL P TRANSF. DISCRI TRANSF.	• **PAL** 1. Receive a PAL colour bar signal and set the oscilloscope at the X-Y mode and then connect CH-1 (X-axis) to TP-49 and CH-2 (Y-axis) to TP-48 respectively. 2. Short the C317 capacitor with a jumper wire and connect pin ㉔ and ㉖ of IC201 with 10 kΩ resistor. See Lissajous' Fig. (A). 3. Adjust the COLOUR control knob so that the figure is not saturated. 4. Adjust the DL AMP VR so that the figure is altered to (B) from (A). 5. Adjust the DL P TRANSF (T303) so that the figure is altered to (C) from (B). 6. Repeat adjustments 4. and 5. more than twice. 7. Remove the shorted jumper wire and 10 kΩ resistor from pin ㉔ and pin ㉖ of IC201. 8. Then adjust the DISCRI TRANSF (T302A: Burst cleaning) so that the figure is minimized to (E) from (D). 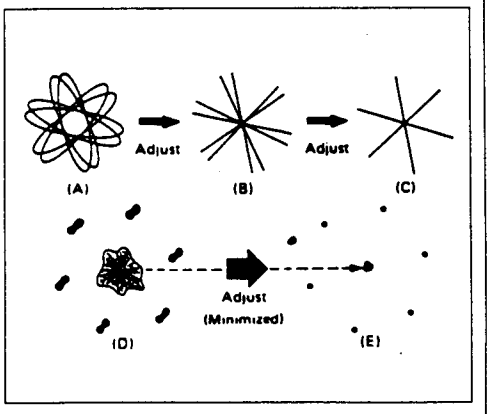

MAIN CIRCUIT

Item	Measuring instrument	Test point	Adjustment part	Description
FOCUS			FOCUS VR (HVT)	Adjust the FOCUS VR for best overall definition and picture detail at normal brightness and contrast.
VERTICAL HEIGHT			V HEIGHT VR	Adjust the V HEIGHT VR to obtain the optimum size of vertical height.
SUB BRIGHT & SUB CONTRAST			SUB BRIGHT VR SUB CONTRAST VR	Adjust the SUB BRIGHT VR and SUB CONTRAST VR until an optimum picture is obtained.

AUTO SEARCH CIRCUIT

Item	Measuring instrument	Test point	Adjustment part	Description
SEARCH ADJUSTMENT	DC Voltmeter	IC01 pin = ⑫ D002 anode side	SEARCH ADJ.1 VR SEARCH ADJ.2 VR	★ Carry out these adjustments in a non-signal state. 1. Connect a voltage meter to pin ⑫ of IC01 on the AUTO SEARCH PC Board and adjust SEARCH ADJ.1 VR until the voltage is DC 3 V ±0.2 V. 2. Then connect the voltage meter to D002 (anode side) and adjust SEARCH ADJ.2 VR until voltage is DC 8.2 V ±0.1 V.

PURITY, CONVERGENCE AND WHITE BALANCE

★ The locations of SERVICE SWITCH, SCREEN VR, CUT-OFF VR and DRIVE VR are described in the ALIGNMENT LOCATION of SERVICE ADJUSTMENT or the SCHEMATIC DIAGRAM.

PICTURE TUBE

The picture tube is a precision in-line gun type. For this picture tube, dynamic convergence is carried out by a precision deflec-tion yoke which eliminates the use of convergence yoke and convergence circuit. The adjustment of picture tube is therefore made easier as only the adjustment of static convergence by using magnets is enough. The deflection yoke and purity/convergency magnets assembly has been set at the factory and requires no field adjustments. However, should the assembly be accidentally jarred or tampered with, some or all adjustments may be necessary.

COLOUR PURITY & VERTICAL CENTRE

Loosen yoke retaining screw (Fig. B-1). With a sharp knife cut between the picture tube and the wedge. Remove wedges completely and clean off dried adhesive from the picture tube. PAINT is used to lock the tabs of the purity/convergence magnet assembly in palce (Fig. B-1). The paint must be removed with the end of a screwdriver before any adjustments are attempted.

(As to models equipped with a magnet locking ring, beforehand loosen it.)

1. Select no signal UHF channel. (or Display a monochrome pattern)
2. Let the purity tab come in line horizontally as is hown in Fig. B-2. A long tab should be in the same direction as the other short tab.
3. Move the yoke slowly backward.
4. Turn the GREEN CUT-OFF VR to maximum and the RED and BLUE CUT-OFF VRs to minimum. Then adjust the SCREEN VR so that the green band can be seen best (Fig. B-3)
5. Rotate the two tabs in the opposite directions and with them kept at an angle, together in either direction so that the green band is centered on the picture tube.
6. Check the vertical centre position by displaying a horizontal line. (Select the CUT-OFF SERVICE SWITCH from N to S and a HORIZONTAL LINE will appear.) Unless correct, bring it to the nearest centre by rotating the two tabs, kept at an angle, together in either direction. (Fig. B-4)
7. Repeat steps 5 and 6 alternately until the green band and the vertical centre come to the centre.
8. Move the yoke slowly towards the bell of the tube so that the whole surface of the picture tube is filled with a green pure raster.
9. Turning RED or BLUE CUT-OFF VR to maximum and GREEN CUT-OFF VR to minimum, make sure of a red or blue pure raster.
10. Secure yoke retaining screw (do not install wedges at this time).

(As to models equipped with a magnet locking ring, secure it and keep six magnets from moving even if it is touched slightly.)

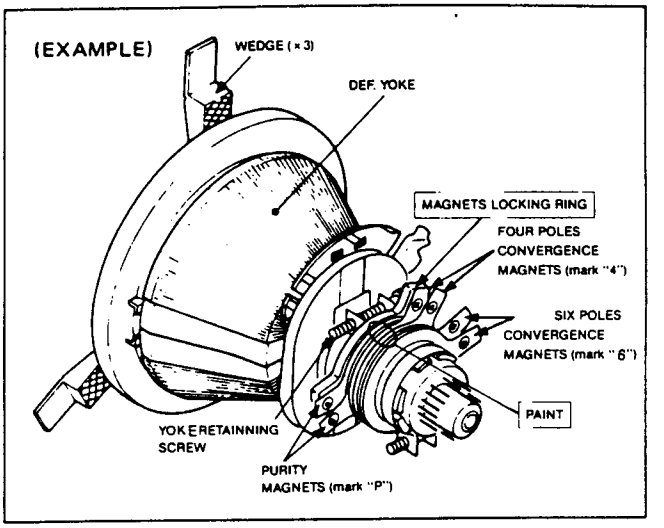

Fig. B-1

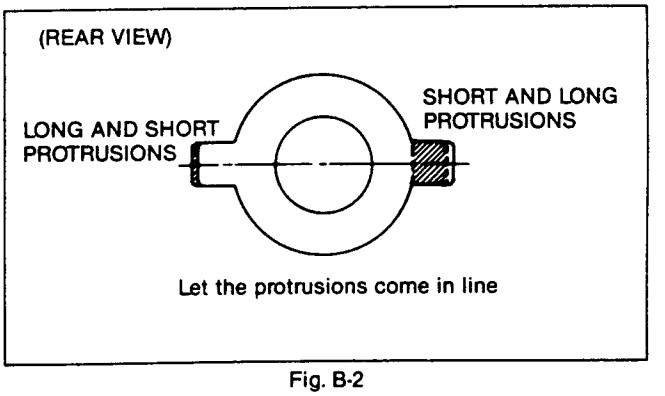

Fig. B-2

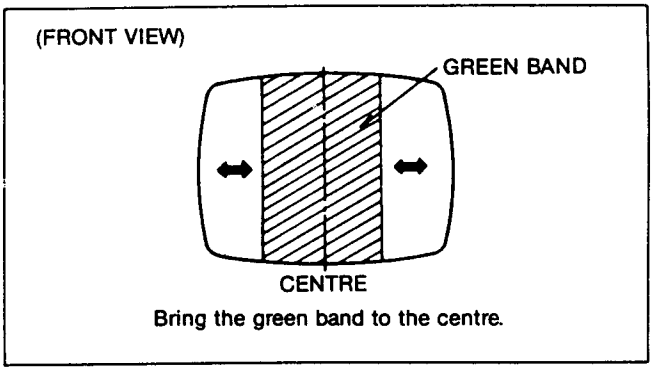

Fig. B-3

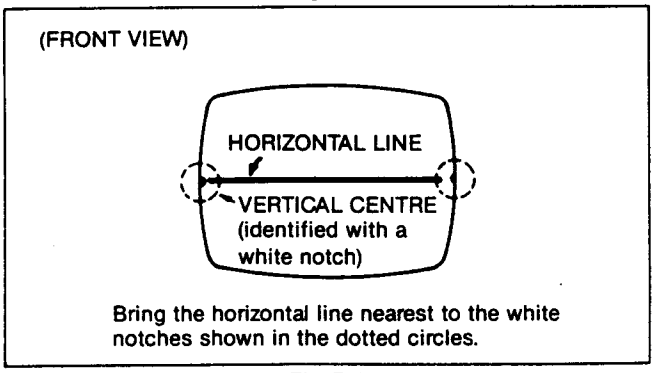

Fig. B-4

STATIC CONVERGENCE & DYNAMIC CONVERGENCE

1. Connect a crosshatch generator to the input terminals and adjust BRIGHTNESS and CONTRAST control for a distinct pattern.
2. Adjust the convergence around the edges of the picture tube by tilting the yoke, up-down and left-right, and temporarily in-stall one wedge at the top of the yoke. (Fig. B-2, 8, 9)
3. Rotate the front pair of tabs (four pole convergence magnet) as a unit to minimize the separation of the red and blue lines around the centre of the screen. To adjust the convergence of red and blue, vary the angle between the tabs. (Fig. B-5)
4. Rotate the rear pair of tabs (six pole convergence magnets) as a unit to minimize the separation of the magenta (R/B) and green lines. (Fig. B-6)
5. Adjust the spacing of the rear tabs to converge the magenta and green lines.
6. Apply paints to fix six magnets.
   (As to models equipped with a magnet locking ring, tighten it.)
7. Remove the wedge installed temporarily on the yoke.
8. Tilting the angle of the yoke up, down and sideways, and adjust the yoke so as to obtain the circumference convergence. (Fig. B-8, 9)
9. Insert wedges to the position as shown in Fig. B-10 to obtain the best circumference convergence.
10. The wedges have a backing of double sided adhesive tape. Therefore, tear off one side of adhesive tape, and fix the wedges.
11. White balance adjustment (Black & White tracking) can now be performed.

WHITE BALANCE ADJUSTMENT
(Black and White Tracking)

1. Display a monochrome pattern.
2. Set the RED and GREEN DRIVE VRs for their mechanical centre.
3. Turn the RED, GREEN and BLUE CUT-OFF VRs and the SCREEN VR fully counterclockwise.
4. Display a horizontal line. (Select the CUT-OFF SERVICE SWITCH fron N to S and a HORIZONTAL LINE will appear.)
5. Turn SCREEN VR slowly clockwise until a very faint horizontal line appears.
6. Turn the CUT-OFF VR of the colour which has appeared first, clockwise by about 10° and then adjust the SCREEN VR again so that the colour may shine faintly.
7. Turn the other colour CUT-OFF VRs slowly clockwise until a reasonable white line appears.
8. Return the monochrome pattern. (When returning a monochrome pattern select the CUT-OFF SERVICE SWITCH from S to N and a monochrome pattern will appear.)
9. Adjust the RED and GREEN DRIVE VRs for best white highlights.

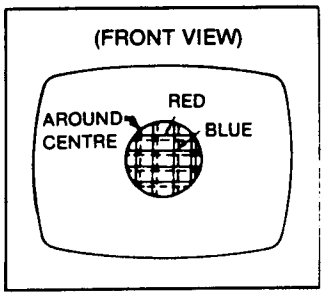

Fig. B-5

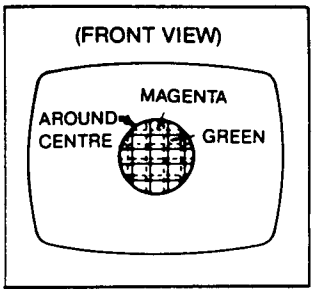

Fig. B-6

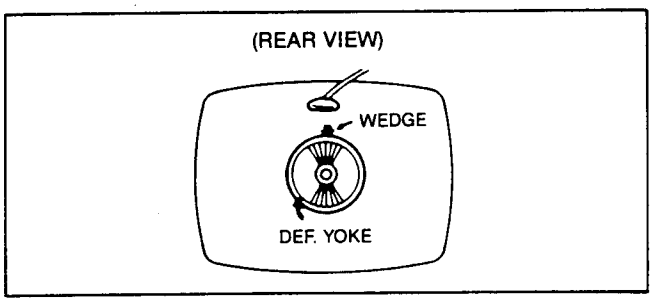

Fig. B-7

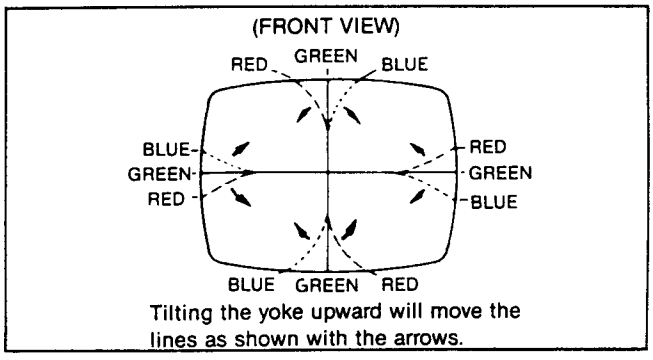

Fig. B-8

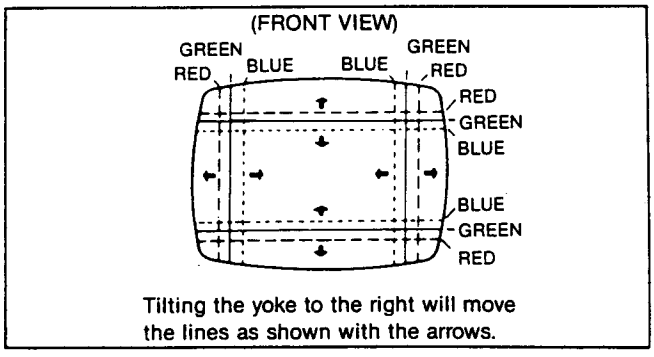

Fig. B-9

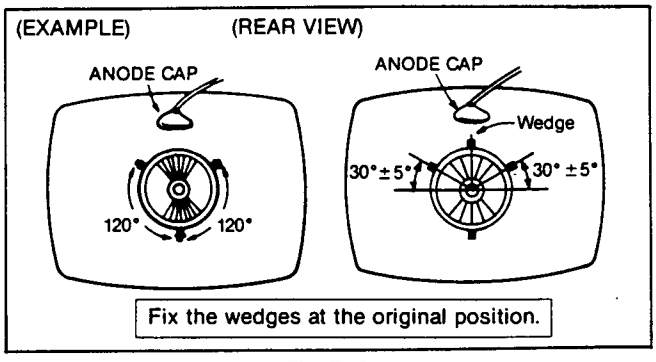

Fig. B-10

PARTS LIST

CAUTION

- The parts marked ⚠ are very important for safety. When replacing these parts, be sure to use specified ones to secure the safety and performance.
- The parts which do not have the drawing in this Parts List, P.C. Board Ass'y and the Part No. columns of which are filled with lines —— , will not be supplied.
- As a rule, the resistors and capacitors which are indicated as shown in (NOTE 2) "HOW TO EXPRESS PARTS NUMBERS OF STANDARD PARTS" are not shown in the list of the parts on the board.
  When ordering the service parts, confirm the resistance/rated power, capacitance/rated voltage, and type of the parts, then order by the part No. indicated according to (NOTE 2).

(NOTE 1) ABBREVIATIONS OF RESISTORS, CAPACITORS AND TOLERANCES

RESISTORS		CAPACITORS	
C R	Carbon Resistor	C CAP.	Ceramic Capacitor
F R	Fusible Resistor	E CAP.	Electrolytic Capacitor
P R	Plate Resistor	M CAP.	Mylar Capacitor
V R	Variable Resistor	HV CAP.	High Voltage Capacitor
HV R	High Voltage Resistor	MF CAP.	Metalized Film Capacitor
MF R	Metal Film Resistor	MM CAP.	Metalized Mylar Capacitor
MG R	Metal Glazed Resistor	MP CAP.	Metalized Polystyrol Capacitor
MP R	Metal Plate Resistor	PP CAP.	Polypropylene Capacitor
OM R	Metal Oxide Film Resistor	PS CAP.	Polystyrol Capacitor
CMF R	Coating Metal Film Resistor	TF CAP.	Thin Film Capacitor
UNF R	Non-Flammable Resistor	MPP CAP.	Metalized Polypropylene Capacitor
CH V R	Chip Variable Resistor	TAN. CAP.	Tantalum Capacitor
CH MG R	Chip Metal Glazed Resistor	CH C CAP.	Chip Ceramic Capacitor
COMP. R	Composition Resistor	BP E CAP.	Bi-Polar Electrolytic Capacitor
LPTC R	Linear Positive Temperature Coefficient Resistor	CH AL E CAP.	Chip Aluminum Electrolytic Capacitor
		CH AL BP CAP.	Chip Aluminum Bi-Polar Capacitor
		CH TAN. E CAP.	Chip Tantalum Electrolytic Capacitor
		CH AL BP E CAP.	Chip Aluminum Bi-Polar Electrolytic Capacitor

TOLERANCES									
F	G	J	K	M	N	R	H	Z	P
± 1 %	± 2 %	± 5 %	± 10 %	± 20 %	± 30 %	+30 -10 %	+50 -10 %	+80 -20 %	+100 - 0 %

(NOTE 2) HOW TO EXPRESS PARTS NUMBERS OF STANDARD PARTS

■ RESISTOR

Q R □ □ □ □ □ — ○ ○ ○

Kind | Rated Power | Shape | Tolerance | Resistance

Symbol	Part Name
C	COMP. R
D	C R
S	CH MG R

Symbol	Rated Power
0 1	1 W
1 2	1/2 W
1 4	1/4 W
1 6	1/6 W
1 8	1/8 W
A 0	1/10W

Symbol	Shape
1	Straight lead
8	Chip

Indicate with first two-figure expressed by Ω and following 0.
Please note that, in case of resistance less than 10 Ω, a letter "R" will be effective as point.

Ex.
- 2.2 Ω → 2R2
- 470 Ω = 47×10^1 → 471
- 150 kΩ = 15×10^4 → 154

■ CAPACITOR

Q □ □ □ □ □ □ — ○ ○ ○

Kind | Shape | Pated Voltage | Tolerance | Capacitance

Symbol	Part Name
C S	C CAP.
C S	CH C CAP.
E T	E CAP.
F M	M CAP.

6 Figure \ 5 Figure	0	1	2
A		10 V	100 V
C		16 V	160 V
D			200 V
E		25 V	250 V
H		50 V	500 V
J	6.3 V	63 V	
V		35 V	

Indicate with first two-figure expressed by pF and following 0.
Please note that, in case of capacitance less than 10 pF, a letter "R" will be effective as point.

Ex.
- 5 pF → 5R0
- 1000 pF = 10×10^2 → 102
- 47 μF = 47×10^6 → 476

Symbol	Shape
1	Straight lead
1	Leads in the same direction
8	Chip
A	Leads in the same direction (Compact part)

MAIN PARTS LIST

SYMBOL NO.	⚠	PART NO.	PART NAME	REMARKS
CRT & TUNER				
	⚠	CELD002-002	DEGAUSING COIL	L01
TU1001		KM7451ES-B04	UHF E. TUNER	
	⚠	A34JRH61X15	PICTURE TUBE	INC. DY, Wedge, Magnet*
VARIABLE R				
R1104		QVPE611-203HZ	V R (NOISE)	20kΩ B
R1221		QVPA603-333A	V R (SUB CONT)	33kΩ B
R1222		QVAA009-CB14A	V R (PICTURE)	10kΩ B
R1227		QVPA603-103A	V R (SUB BRIGHT)	10kΩ B
R1230		QVAA010-CB14A	V R (BRIGHT)	10kΩ B
R1339		QVPE611-102HZ	V R (DL AMP)	1kΩ B
R1361		QVAA009-CB14A	V R (COLOUR)	10kΩ B
R1403		QVPA803-201M	V R (V. HEIGHT)	200 Ω B
R1912		QVPA804-503M	V R (B1 ADJ.	50kΩ B
R3009		QVPA803-502M	V R (B CUT OFF)	5kΩ B
R3015		QVPA803-502M	V R (R CUT OFF)	5kΩ B
R3017		QVPA803-502M	V R (G CUT OFF)	5kΩ B
R3021		QVPA803-201M	V R (R DRIVE)	200 Ω B
R3023		QVPA803-201M	V R (G DRIVE)	200 Ω B
R8021		QVPE611-503HZ	V R (SEARCH 1)	50kΩ B *
R8022		QVPE611-503HZ	V R (SEARCH 2)	50kΩ B *
TRANSFORMER				
	⚠	CE41225-00A-KD	H. V. TRANSF.	T1522
T1552		CE40203-00A	DRIVE TRANSF.	
T1901	⚠	CE41056-00B	SW. TRANSF.	
T1902	⚠	CE41059-00B	DRIVE TRANSF.	
DIODE				
D1314		RD5. 6ES (B3) -Y	ZENER DIODE	*
D1321		RD5. 6ES (B3) -Y	ZENER DIODE	*
D1502		MA4056 (M) -Y	ZENER DIODE	*
D1507	⚠	MA4091 (M) -Y	ZENER DIODE	*
D1510		MA4051 (M) -Y	ZENER DIODE	*
D1512		RD8. 2E (B2)	ZENER DIODE	
D1513		RD8. 2E (B2)	ZENER DIODE	
D1572	⚠	MA4068 (L) -Y	ZENER DIODE	*
D1901		LB-156-LFB	DIODE BRIDGE	
D1925		RD9. 1E (B)	ZENER DIODE	
D1926		DFA1A4-Z	SI. DIODE	*
D1929		RD18E (B)	ZENER DIODE	
D4001		SLR-40VR5F	L. E. D.	Power
D4002		GL4HS8	L. E. D.	Off Timer
D4003		SLR-40VR5F	L. E. D.	On Timer
D4004		GL4EG8	L. E. D.	Search
TRANSISTOR				
Q1551	⚠	2SD1426	SI. TRANSISTOR	H. Out
Q3001		2SC2371 (K-M)	SI. TRANSISTOR	
Q3002		2SC2371 (K-M)	SI. TRANSISTOR	
Q3004		2SC2371 (K-M)	SI. TRANSISTOR	
IC				
IC1201		M52016SP	I. C. (M)	
IC1401		UPC1488H	I. C.	
IC1651		TA7222AP	I. C. (M)	
IC1721		AN78L05-Y	I. C.	*
IC1901	⚠	STR54041S	I. C. (H)	
IC1921		UPC574J	I. C.	
IC4001		GP1U501W	IR DETECT UNIT	
IC8001		MB3614	I. C.	
IC8002		TC74HC86P	I. C. (M)	
IC8003		TC74HC109P	I. C.	

SYMBOL NO.	⚠	PART NO.	PART NAME	REMARKS
IC				
IC8004		TC4066BP	I. C. (M)	
IC8005		AN78L05	I. C. (M)	
OTHERS				
		CM11674-00B-E	FRONT CABI ASSY	(IVORY) *
		CM11674-00A-E	FRONT CABI ASSY	(METALLIC DARK GRAY) *
		CM33531-A02-E	POWER KNOB	Within F Cab AssY *
		SBX-F902A (E)	IF MODULE	
		SBX-M903A (E)	S SELECT MODULE	
		CM41678-003-E	PUSH KNOB	(X2) *
	⚠	QMP51B8-200R	POWER CORD	
		CM33530-B02-E	BUTTON	*
CP1401	⚠	ICP-N10	IC PROTECTER	
DL1201		CE41064-001	DELAY LINE	
DL1301		CE41260-001	1H DELAY LINE	
F1901	⚠	QMF51E2-3R15S	FUSE	3.15A
LF1901	⚠	CE40995-00A	LINE FILTER	
R1555	⚠	QRZ0055-470M	F R	47 Ω 1/2W J
R1571	⚠	QRH017J-4R7M	F R	4.7 Ω 1W J
R1908	⚠	QRZ0054-6R8M	F R	6.8 Ω 1/4W J
R1934	⚠	QRH017J-101M	F R	100 Ω 1W J
S1201		QSL4A13-C02	LEVER SWITCH	Service
S1702		QST3221-C01	PUSH SWITCH	Preset·Skew
S1703		QSP4H11-C02	PUSH SWITCH	Power
S1705		QSP4H11-C02	PUSH SWITCH	Tuning△
S1706		QSP4H11-C02	PUSH SWITCH	Tuning▽
S1707		QSP4H11-C02	PUSH SWITCH	Memory
S1708		QSP4H11-C02	PUSH SWITCH	CH△
S1709		QSP4H11-C02	PUSH SWITCH	CH▽
S1710		QSP4H11-C02	PUSH SWITCH	Vol△
S1711		QSP4H11-C02	PUSH SWITCH	Vol▽
S1712		QSP4H11-C02	PUSH SWITCH	Auto Search
S1901	⚠	QSP4D21-C06	PUSH SWITCH	Main Power
TH1901	⚠	A76038-T	POSISTOR	or A76038
X1302		CE41115-001	CRYSTAL	
X1501		CSB500F9	CERAMIC RESO	

EXPLODED VIEW PARTS LIST

	SYMBOL NO.	PART NO.	PART NAME	REMARKS
⚠	1	A34JRH61X15	PICTURE TUBE	INC DY, Wedge, Magnet *
⚠	2	CELD002-002	DEGAUSING COIL	L01
	3	CM41678-003-E	PUSH KNOB	(X2) *
	4	CM41677-003-E	KNOB CAP	*
⚠	5	CE41225-00A-KD	H. V. TRANSF.	T1522
	6	HSA0899-01D-KD	SPEAKER	SP01
	7	CM33550-D02	INDICATOR WINDOW	
	8	CM21737-B02	CONTROL SHEET	
⚠	9	QMP51B8-200R	POWER CORD	
	10	CM40024-001	WIRE CLAMP	
	11	CM33530-B02-E	BUTTON	*
	12	CM10761-005-ME	REAR COVER	*
	13	GBSA4016N	TAP SCREW	(X6)
	14	CM21933-001-E	RATING LABEL	*
	15	CH30359-00A	BRAIDED ASSY	
	16	CM21738-C02-E	DOOR(IVORY)	*
	16	CM21738-C01-E	DOOR(METALLIC DARK GRAY)	*
	17	CM20952-B01-V0	POWER CORD CLAMP	
	100	CM11674-00B-E	FRONT CABI ASSY	(IVORY) *
	100	CM11674-00A-E	FRONT CABI ASSY	(METALLIC DARK GRAY) *
	101	CM33531-A02-E	POWER KNOB	Within F Cab AssY *
	102	CM30861-051	SPRING	〃 *

EXPLODED VIEW

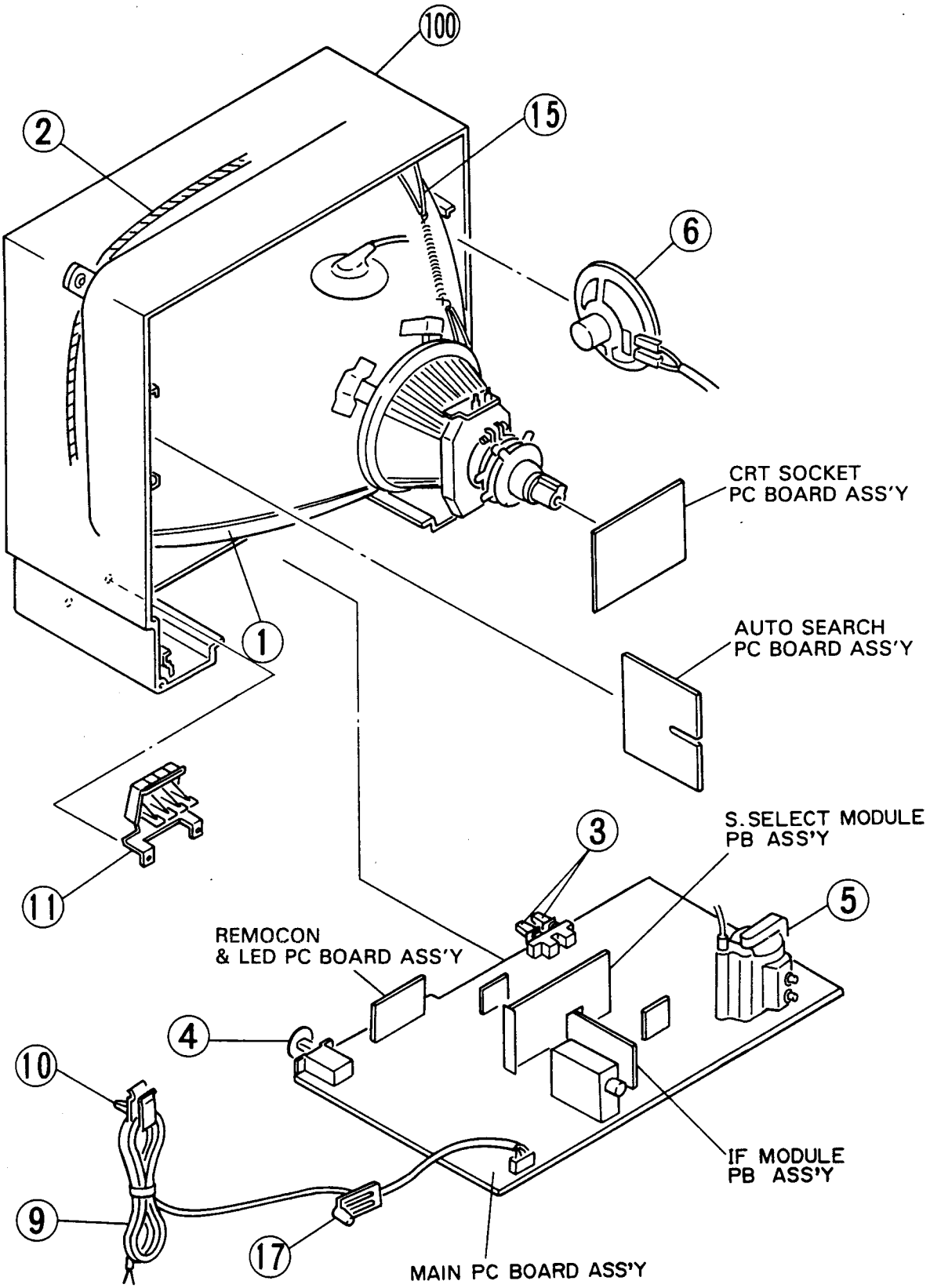

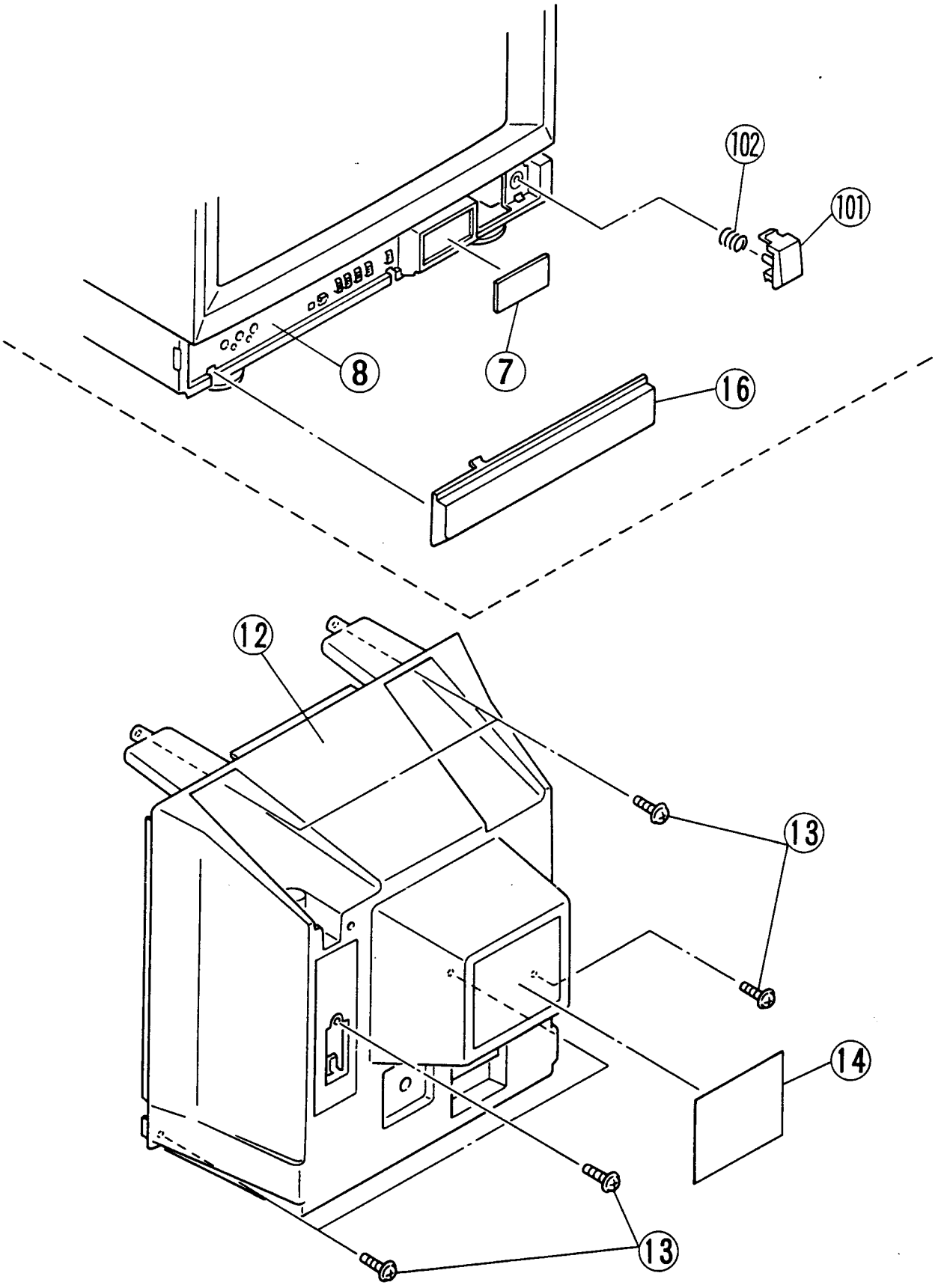
102
101
8
7
16
12
13
14
13

PRINTED CIRCUIT BOARD PARTS LIST

■ MAIN PC BOARD ASS'Y (SBX-1905A-U2)

(1/4)

SYMBOL NO.	PART NO.	PART NAME	REMARKS
VARIABLE R			
R1104	QVPE611-203HZ	V R (NOISE)	20kΩ B
R1221	QVPA603-333A	V R (SUB CONT)	33kΩ B
R1222	QVAA009-CB14A	V R (PICTURE)	10kΩ B
R1227	QVPA603-103A	V R (SUB BRIGHT)	10kΩ B
R1230	QVAA010-CB14A	V R (BRIGHT)	10kΩ B
R1339	QVPE611-102HZ	V R (DL AMP)	1kΩ B
R1361	QVAA009-CB14A	V R (COLOUR)	10kΩ B
R1403	QVPA803-201M	V R (V. HEIGHT)	200 Ω B
R1912	QVPA804-503M	V R (B1 ADJ.)	50kΩ B
RESISTOR			
R1001	QRD149J-150S	C R	15 Ω 1/4W J
R1106	QRD149J-150S	C R	15 Ω 1/4W J
R1235	QRG019J-150S	OM R	15 Ω 1W J
R1411	QRD123J-681SX	C R	680 Ω 1/2W J *
R1412	QRD123J-1R5SX	C R	1.5 Ω 1/2W J *
R1435	QRD123J-392S	C R	3.9kΩ 1/2W J
R1519	QRG019J-151S	OM R	150 Ω 1W J
⚠ R1521	QRD161J-183Y	C R	18kΩ 1/6W J *
⚠ R1522	QRD161J-683Y	C R	68kΩ 1/6W J *
R1523	QRD123J-271SX	C R	270 Ω 1/2W J *
R1524	QRG019J-151S	OM R	150 Ω 1W J
R1531	QRG029J-820A	OM R	82 Ω 2W J
⚠ R1532	QRD161J-223Y	C R	22kΩ 1/6W J *
⚠ R1533	QRD143J-6R8SX	C R	6.8 Ω 1/4W J *
⚠ R1534	QRD161J-683Y	C R	68kΩ 1/6W J *
R1551	QRG019J-471S	OM R	470 Ω 1W J
R1552	QRX029J-1R8	MF R	1.8 Ω 2W J
R1553	QRX029J-4R7A	MF R	4.7 Ω 2W J
R1554	QRX029J-6R8	MF R	6.8 Ω 2W J
R1559	QRG019J-561S	OM R	560 Ω 1W J
R1560	QRG029J-121A	OM R	120 Ω 2W J
⚠ R1572	QRV141F-6341AY	MF R	6.34kΩ 1/4W F *
⚠ R1573	QRV141F-3011AY	MF R	3.01kΩ 1/4W F *
R1902	QRF153K-5R6	UNF R	5.6 Ω 15W K
R1903	QRG029J-823A	OM R	82kΩ 2W J
R1904	QRG029J-473A	OM R	47kΩ 2W J
R1907	QRG019J-221S	OM R	220 Ω 1W J
R1909	QRM055K-R33	MP R	0.33 Ω 5W K
R1914	QRX019J-4R7S	MF R	4.7 Ω 1W J
R1917	QRG029J-470A	OM R	47 Ω 2W J
R1920	QRG029J-100A	OM R	10 Ω 2W J
R1921	QRG029J-472A	OM R	4.7kΩ 2W J
R1922	QRG029J-333A	OM R	33kΩ 2W J
R1923	QRG029J-682A	OM R	6.8kΩ 2W J
R1925	QRG029J-820A	OM R	82 Ω 2W J
R1927	QRD123J-152SX	C R	1.5kΩ 1/2W J *
R1931	QRG019J-273S	OM R	27kΩ 1W J
R1940	QRG029J-333A	OM R	33kΩ 2W J
⚠ R1961	QRZ0057-825	C R	8.2MΩ 1W J
CAPACITOR			
C1001	QEM61EK-106MZ	E CAP.	10μF 25V K *
C1005	QEC01HM-224MZ	E CAP.	0.22μF 50V M *
C1308	QEN61HM-105Z	BP E CAP.	1μF 50V M *
C1309	QFV71HJ-104MZ	TF CAP.	0.1μF 50V J *
C1317	QEN61HM-474Z	BP E CAP.	0.47μF 50V M *
C1322	QFV71HJ-393MZ	TF CAP.	0.039μF 50V J *
C1401	QEE51CK-225B	TAN. CAP.	2.2μF 16V K
C1402	QEM61HK-475MZ	E CAP.	4.7μF 50V K *

(2/4)

	SYMBOL NO.	PART NO.	PART NAME	REMARKS	
	CAPACITOR				
	C1422	QFV81HJ-474M	TF CAP.	0.47μF 50V	J
	C1512	QFV71HJ-104MZ	TF CAP.	0.1μF 50V	J *
⚠	C1513	QETC0JM-477Z	E CAP.	470μF 6.3V	M *
⚠	C1551	QFZ0081-5301S	MPP CAP.	5300pF 1600V	±3%
	C1557	QFV71HJ-104MZ	TF CAP.	0.1μF 50V	J *
	C1558	QFZ0089-354S	MPP CAP.	0.35μF 200V	J
	C1655	QFV41HJ-394M	TF CAP.	0.39μF 50V	J
	C1665	QFV41HJ-394M	TF CAP.	0.39μF 50V	J
⚠	C1900	QCZ9041-102A	C CAP.	1000pFAC400V	M
⚠	C1901	QFZ9022-473M	MF CAP.	0.047μFAC250V	M
⚠	C1902	QFZ9022-473M	MF CAP.	0.047μFAC250V	M
⚠	C1905	QCZ9034-472A	C CAP.	4700pFAC400V	P
⚠	C1906	QCZ9034-472A	C CAP.	4700pFAC400V	P
	C1907	QCZ9034-472A	C CAP.	4700pFAC400V	P
	C1909	QEZ0084-227R	E CAP.	220μF 400V	M
	C1910	QCF22HP-103M	CH C CAP.	0.01μF 500V	P
	C1912	QCZ0122-391U	C CAP.	390pF 2kV	K
	C1916	QFV71HJ-474MZ	TF CAP.	0.47μF 50V	J *
	C1919	QFV71HJ-474MZ	TF CAP.	0.47μF 50V	J *
	C1923	QCZ0122-471A	C CAP.	4700pF 2kV	K
⚠	C1961	QCZ9041-102A	C CAP.	1000pFAC400V	M
⚠	C1962	QCZ9041-471A	C CAP.	470pFAC400V	M
	C1972	QCZ0122-821U	C CAP.	820pF 2kV	K
	TRANSFORMER				
	T1302A	CE40359	IDENT TRANSF		
	T1303	CE40396-A01	DL P TRANSF		
	T1552	CE40203-00A	DRIVE TRANSF.		
⚠	T1901	CE41056-00B	SW. TRANSF.		
⚠	T1902	CE41059-00B	DRIVE TRANSF.		
	COIL				
	L1201	CE40041-150Z	PEAKING COIL	15μH	*
	L1303	CELP006-8R2Z	PEAKING COIL	8.2μH	*
⚠	L1551	CE40954-00A	LIN COIL		
	L1552	CELC001-270	CHOKE COIL		
	L1555	CE40037-111	HVT CHOKE		
	L1556	CE40037-111	HVT CHOKE		
	DIODE				
	D1221	1SS133-Y	SI. DIODE		*
	D1222	1SS133-Y	SI. DIODE		*
	D1231	1SS133-Y	SI. DIODE		*
	D1314	RD5.6ES (B3) -Y	ZENER DIODE		*
	D1318	1SS133-Y	SI. DIODE		*
	D1319	1SS133-Y	SI. DIODE		*
	D1321	RD5.6ES (B3) -Y	ZENER DIODE		*
	D1401	1SR35-100-Z	SI. DIODE		*
	D1404	1SS133	SI. DIODE		
	D1405	1SS133	SI. DIODE		
	D1501	1SS133-Y	SI. DIODE		*
	D1502	MA4056 (M) -Y	ZENER DIODE		*
	D1504	1SS133-Y	SI. DIODE		*
	D1505	1SS133-Y	SI. DIODE		*
⚠	D1507	MA4091 (M) -Y	ZENER DIODE		*
⚠	D1508	1SS133-Y	SI. DIODE		*
	D1510	MA4051 (M) -Y	ZENER DIODE		*
	D1511	1SS133-Y	SI. DIODE		*
	D1512	RD8.2E (B2)	ZENER DIODE		
	D1513	RD8.2E (B2)	ZENER DIODE		
	D1551	DFA1A4-Z	SI. DIODE		*

(3/4)

	SYMBOL NO.	PART NO.	PART NAME	REMARKS	
	DIODE				
	D1552	DFA1A4-Z	SI. DIODE		*
	D1553	RH1S-Z	SI. DIODE		*
	D1571	1SR35-100-Z	SI. DIODE		*
⚠	D1572	MA4068 (L) -Y	ZENER DIODE		*
	D1652	1SS133-Y	SI. DIODE		*
	D1704	1SS133-Y	SI. DIODE		*
	D1724	1SS133-Y	SI. DIODE		*
	D1801	1SS133-Y	SI. DIODE		*
	D1802	1SS133-Y	SI. DIODE		*
	D1803	1SS133-Y	SI. DIODE		*
	D1804	1SS133-Y	SI. DIODE		*
	D1805	1SS133-Y	SI. DIODE		*
	D1806	1SS133-Y	SI. DIODE		*
	D1901	LB-156-LFB	DIODE BRIDGE		
	D1902	EU2A-Z	SI. DIODE		*
	D1903	RU1C-LFA1	SI. DIODE		
	D1904	EU2A-Z	SI. DIODE		*
	D1905	W06-B-Z	SI. DIODE		*
	D1921	RU4B-LFK2	SI. DIODE		
	D1922	EU2A-Z	SI. DIODE		*
	D1923	1SS133-Y	SI. DIODE		*
	D1924	EU2A-Z	SI. DIODE		*
	D1925	RD9. 1E (B)	ZENER DIODE		
	D1926	DFA1A4-Z	SI. DIODE		*
	D1927	1SS133-Y	SI. DIODE		*
	D1928	1SS133-Y	SI. DIODE		*
	D1929	RD18E (B)	ZENER DIODE		
	TRANSISTOR				
	Q1105	2SC1815 (Y, GR) Y	SI. TRANSISTOR		*
	Q1106	2SK301 (P) -Y	F E T		*
	Q1107	2SC1815 (Y, GR) Y	SI. TRANSISTOR		*
	Q1201	2SA1015 (Y, GR) Y	SI. TRANSISTOR		*
	Q1307	2SC1815 (BL) -Y	TRANSISTOR		*
	Q1502	2SC1627A-Y	SI. TRANSISTOR		*
	Q1503	2SC1815 (Y, GR) Y	SI. TRANSISTOR		*
	Q1504	2SA1015 (Y, GR) Y	SI. TRANSISTOR		*
	Q1505	2SK301 (P) -Y	F E T		*
	Q1507	2SC1815 (Y, GR) Y	SI. TRANSISTOR		*
⚠	Q1508	2SC1815 (Y, GR) Y	SI. TRANSISTOR		*
⚠	Q1509	2SC1815 (Y, GR) Y	SI. TRANSISTOR		*
⚠	Q1551	2SD1426	SI. TRANSISTOR	H. Out	
	Q1571	2SC1815 (Y, GR) Y	SI. TRANSISTOR		*
	Q1651	2SA1015 (Y, GR) Y	SI. TRANSISTOR		*
	Q1901	2SC2655 (Y) -Y	SI. TRANSISTOR		*
	Q1902	2SA966-Y	SI. TRANSISTOR		*
	Q1921	2SA966-Y	SI. TRANSISTOR		*
	Q1922	2SC1815 (Y, GR) Y	SI. TRANSISTOR		*
	Q1923	2SD1274AV	SI. TRANSISTOR		
	Q1924	2SA1013 (O) -Y	TRANSISTOR		*
	Q1925	2SC2229 (Y) -Y	SI. TRANSISTOR		*
	Q1926	2SA1015 (Y, GR) Y	SI. TRANSISTOR		*
	IC				
	IC1201	M52016SP	I. C. (M)		
	IC1401	UPC1488H	I. C.		
	IC1651	TA7222AP	I. C. (M)		
	IC1721	AN78L05-Y	I. C.		*
⚠	IC1901	STR54041S	I. C. (H)		
	IC1921	UPC574J	I. C.		

(4/4)

SYMBOL NO.	PART NO.	PART NAME	REMARKS
OTHERS			
	SBX-F902A (E)	IF MODULE	
	SBX-M903A (E)	S SELECT MODULE	
⚠ CP1401	ICP-N10	IC PROTECTER	
DL1201	CE41064-001	DELAY LINE	
DL1301	CE41260-001	1H DELAY LINE	
⚠ F1901	QMF51E2-3R15S	FUSE	3.15A
⚠ LF1901	CE40995-00A	LINE FILTER	
⚠ R1555	QRZ0055-470M	F R	47 Ω 1/2W J
⚠ R1571	QRH017J-4R7M	F R	4.7 Ω 1W J
⚠ R1908	QRZ0054-6R8M	F R	6.8 Ω 1/4W J
⚠ R1934	QRH017J-101M	F R	100 Ω 1W J
S1201	QSL4A13-C02	LEVER SWITCH	Service
S1702	QST3221-C01	PUSH SWITCH	Preset·Skew
S1703	QSP4H11-C02	PUSH SWITCH	Power
S1705	QSP4H11-C02	PUSH SWITCH	Tuning△
S1706	QSP4H11-C02	PUSH SWITCH	Tuning▽
S1707	QSP4H11-C02	PUSH SWITCH	Memory
S1708	QSP4H11-C02	PUSH SWITCH	CH△
S1709	QSP4H11-C02	PUSH SWITCH	CH▽
S1710	QSP4H11-C02	PUSH SWITCH	Vol△
S1711	QSP4H11-C02	PUSH SWITCH	Vol▽
S1712	QSP4H11-C02	PUSH SWITCH	Auto Search
⚠ S1901	QSP4D21-C06	PUSH SWITCH	Main Power
⚠ TH1901	A76038-T	POSISTOR	or A76038
TU1001	KM7451ES-B04	UHF E. TUNER	
X1302	CE41115-001	CRYSTAL	
X1501	CSB500F9	CERAMIC RESO	
CHROMA BP BLOCK			
COIL			
L1301	CELP006-5R6	PEAKING COIL	5.6μH
ON SCREEN DRIVE BLOCK			
COIL			
L1204	CE41281-680	PEAKING COIL	
DIODE			
D1203	W06A	SI. DIODE	
D1204	1SS133	SI. DIODE	
D1232	1SS133	SI. DIODE	
TRANSISTOR			
Q1205	2SA1015 (Y, GR)	SI. TRANSISTOR	
Q1206	2SC1815 (Y)	SI. TRANSISTOR	
Q1207	2SC1815 (Y)	SI. TRANSISTOR	
Q1208	2SA673 (C)	SI. TRANSISTOR	

■ CRT SOCKET PC BOARD ASS'Y (SBX-3904A-U2)

(1/1)

SYMBOL NO.	PART NO.	PART NAME	REMARKS
VARIABLE R			
R3009	QVPA803-502M	V R (B CUT OFF)	5kΩ B
R3015	QVPA803-502M	V R (R CUT OFF)	5kΩ B
R3017	QVPA803-502M	V R (G CUT OFF)	5kΩ B
R3021	QVPA803-201M	V R (R DRIVE)	200 Ω B
R3023	QVPA803-201M	V R (G DRIVE)	200 Ω B
RESISTOR			
R3024	QRG019J-153S	OM R	15kΩ 1W J
R3025	QRG019J-153S	OM R	15kΩ 1W J
R3026	QRG019J-153S	OM R	15kΩ 1W J
R3035	QRG029J-473A	OM R	47kΩ 2W J
CAPACITOR			
C3007	QCZ9016-103A	C CAP.	0.01μFAC125V M
COIL			
L3001	QQL043K-221	PEAKING COIL	220μH
TRANSISTOR			
Q3001	2SC2371 (K-M)	SI. TRANSISTOR	
Q3002	2SC2371 (K-M)	SI. TRANSISTOR	
Q3003	2SC1815 (Y) -Y	SI. TRANSISTOR	*
Q3004	2SC2371 (K-M)	SI. TRANSISTOR	
Q3005	2SC1815 (Y) -Y	SI. TRANSISTOR	*
OTHERS			
⚠	CE40228-00E	CRT SOCKET	

■ REMOCON & LED PC BOARD ASS'Y (SBX-4901A-U2)

(1/1)

SYMBOL NO.	PART NO.	PART NAME	REMARKS
DIODE			
D4001	SLR-40VR5F	L. E. D.	Power
D4002	GL4HS8	L. E. D.	Off Timer
D4003	SLR-40VR5F	L. E. D.	On Timer
D4004	GL4EG8	L. E. D.	Search
IC			
IC4001	GP1U501W	IR DETECT UNIT	

■ AUTO SEARCH PC BOARD ASS'Y (SBX-8901A-U2)

(1/1)

SYMBOL NO.	PART NO.	PART NAME	REMARKS	
VARIABLE R				
R8021	QVPE611-503HZ	V R (SEARCH 1)	50kΩ B	*
R8022	QVPE611-503HZ	V R (SEARCH 2)	50kΩ B	*
DIODE				
D8001	1SS133-Y	SI. DIODE		*
D8002	1SS133-Y	SI. DIODE		*
D8003	1SS133-Y	SI. DIODE		*
D8004	1SS133-Y	SI. DIODE		*
D8005	1SS133-Y	SI. DIODE		*
TRANSISTOR				
Q8001	2SA1015 (Y, GR) Y	SI. TRANSISTOR		*
Q8002	2SC1815 (Y, GR) Y	SI. TRANSISTOR		*
Q8003	2SC1815 (Y, GR) Y	SI. TRANSISTOR		*
Q8004	2SC1815 (Y, GR) Y	SI. TRANSISTOR		*
Q8005	2SC1815 (Y, GR) Y	SI. TRANSISTOR		*
Q8006	2SC1815 (Y, GR) Y	SI. TRANSISTOR		*
Q8007	2SC1815 (Y, GR) Y	SI. TRANSISTOR		*
IC				
IC8001	MB3614	I. C.		
IC8002	TC74HC86P	I. C. (M)		
IC8003	TC74HC109P	I. C.		
IC8004	TC4066BP	I. C. (M)		
IC8005	AN78L05	I. C. (M)		

MODULE PC BOARD PARTS LIST

The following module pc boards are supplied as assemblies.

The component parts only the module PC boards are available only when the parts are listed in the "MODULE PRINTED CIRCUIT BOARD PARTS LIST".

IF MODULE PC BOARD Ass'y (SXB-F902A(E) with in MAIN PC BOARD Ass'y.
S.SELECT MODULE PC BOARD Ass'y (SBX-M903A(E) with in MAIN PC BOARD Ass'y.

JVC C-1480EK SCHEMATIC DIAGRAM

■ NOTICE

○ Voltage values and waveforms are measured by respectively receiving and displaying on the screen the colour bars signals of the PAL.
[Voltage value display method]
The voltage values indicated on the circuit diagrame and voltage lists are obtained when PAL colour bar signals are received and displayed on the screen.
Multimeter used.
DC 20kΩ/V
Given figures are all DC voltages.
Sweep speed of oscilloscope
H → 20 μS/div. V → 5 mS/div.
Others → sweep speed specified

○ Since the circuit diagram is a standard one, the circuit and circuit constants may be subject to change for improvement without any notice.

■ SAFETY

FR (FR) denotes a fusible resistor which operates as a fuse. When replacing fusible resistors and parts indicated with black shading ( ) in the circuit diagrams, be sure to ensue safety by using designated parts.
As to other parts too, use designated parts to maintain safety and performance.

NOTE FOR SERVICE

This model's power circuit is partly different in the GND. The difference of the GND is shown by the LIVE primary: ⊥) side GND and the NEUTRAL (secondary: ⏚) side GND.
Don't short between the LIVE side GND and NEUTRAL side GND or never measure with a measuring apparatus (oscilloscope etc.) the LIVE side GND and NEUTRAL side GND at the same time.
If above note will not be kept, a fuse or any parts will be broken.

■ INDICATION OF PARTS SYMBOL

Inside board (Example) SBX-1905A(U) : R1209 → R209
Outside board (Example) R0001 → R01

■ SCHEMATIC DIAGRAM INDICATION

Resistor

○ Resistance value
Without unit: [Ω] K : [kΩ] M : [MΩ]

○ Rated allowable power
Without indication : 1/6W, Others Indicated

○ Type

Without indication	: Carbon resistor
OMR	: Oxide metal film resistor
UNF R	: Unflammable resistor
MF R	: Metal film resistor
FR	: Fusible resistor

• Composition resistor 1/2 [W] is indicated as 1/2S or Comp.

Capacitor

○ Capacitance
Above 1 [pF] : Below 1 [μF]

○ Withstand voltage

Without indication	: DC 50 [V]
Others	: DC withstand voltage [V]
AC indicated	: AC withstand voltage [V]

○ Indications for electrolitic capacitors are as follows.
(Example)
47/50 → capacitance [μF] / withstand voltage [V]

○ Type

Without indication	: Ceramic capacitor
MY	: Mylar capacitor
MM	: Metalized mylar capacitor
PP	: Polypropylene capacitor
MPP	: Metalized polypropylene capacitor
NP	: Nonpolar electrolytic capacitor
BP	: Bipolar electrolytic capacitor
TAN.	: Tantalum capacitor

Coil
Without unit : [μH]

Connection method
: Connector, : Receptacle
○ : Wrapping or soldering

Power Supply
: B_1 (115V), : B_2 (12V)
: 9 V : 5 V

Test point & GND. symbol.
: Test point by miniature GT pin
: Only test point display
⊥ : Live (Primary) side ground
⏚ : Neutral (Secondary) side ground

S. SELECT MODULE SCHEMATIC DIAGRAM

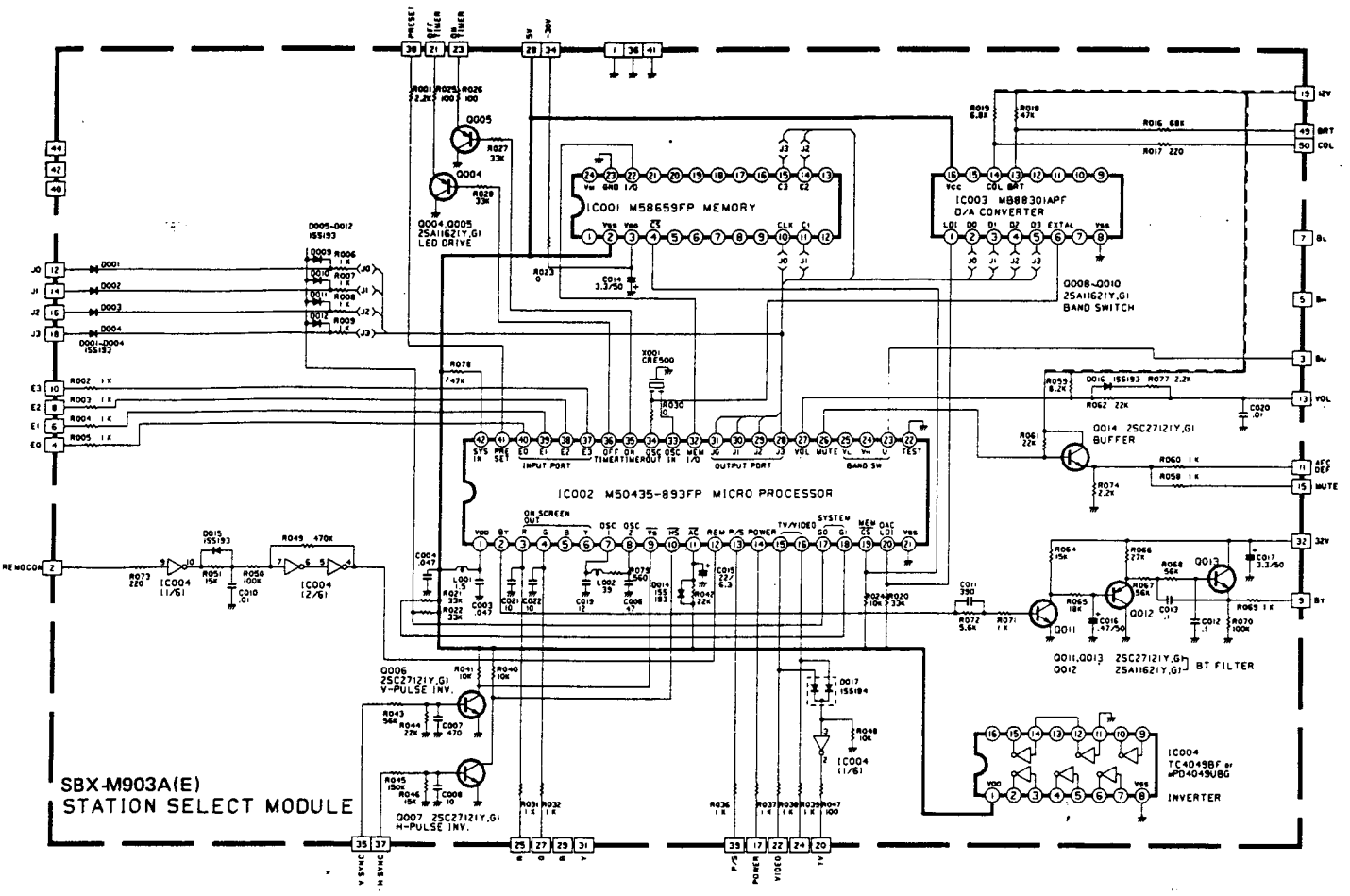

IF MODULE SCHEMATIC DIAGRAM

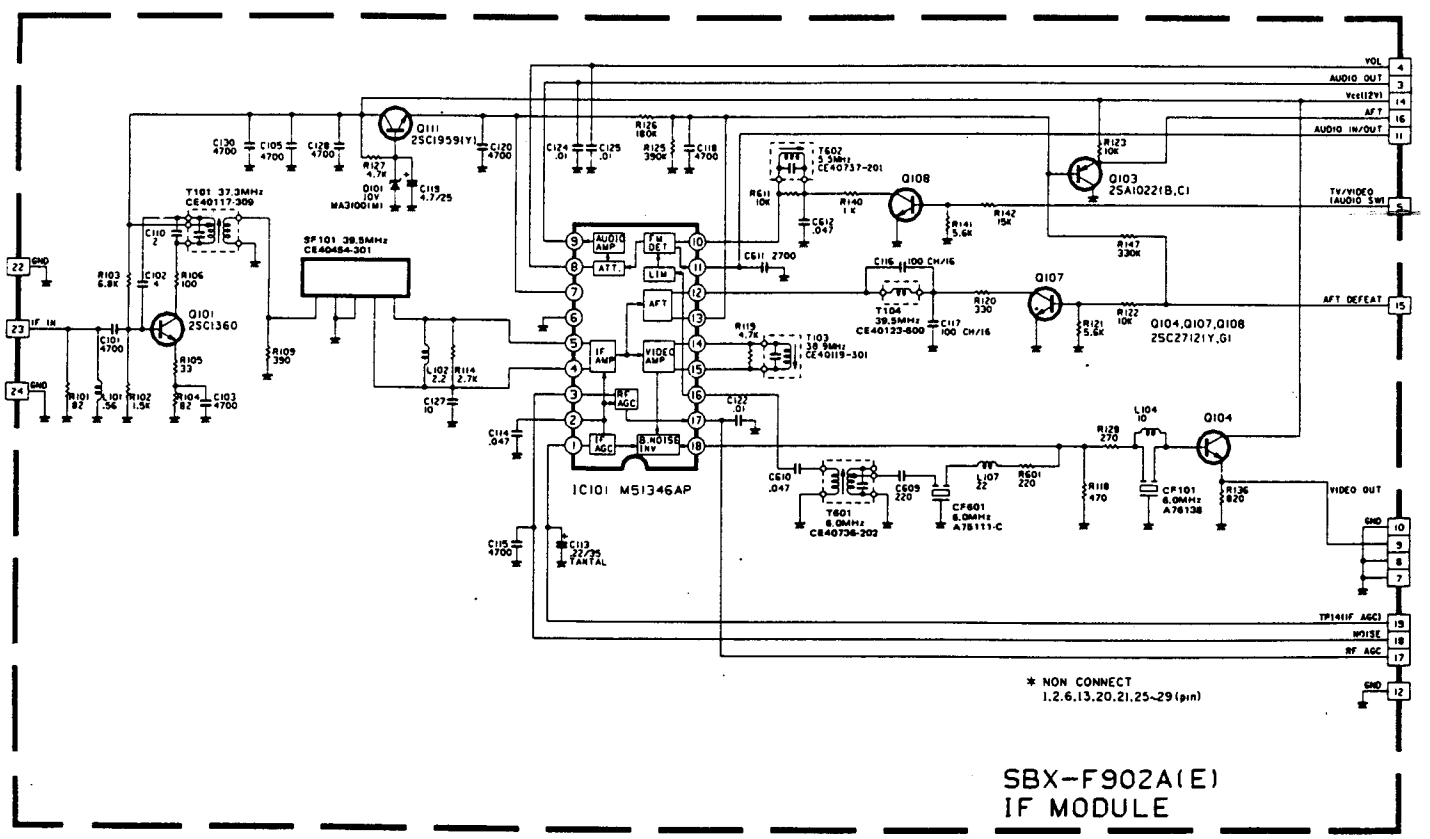

MAIN PCB BACK PATTERN

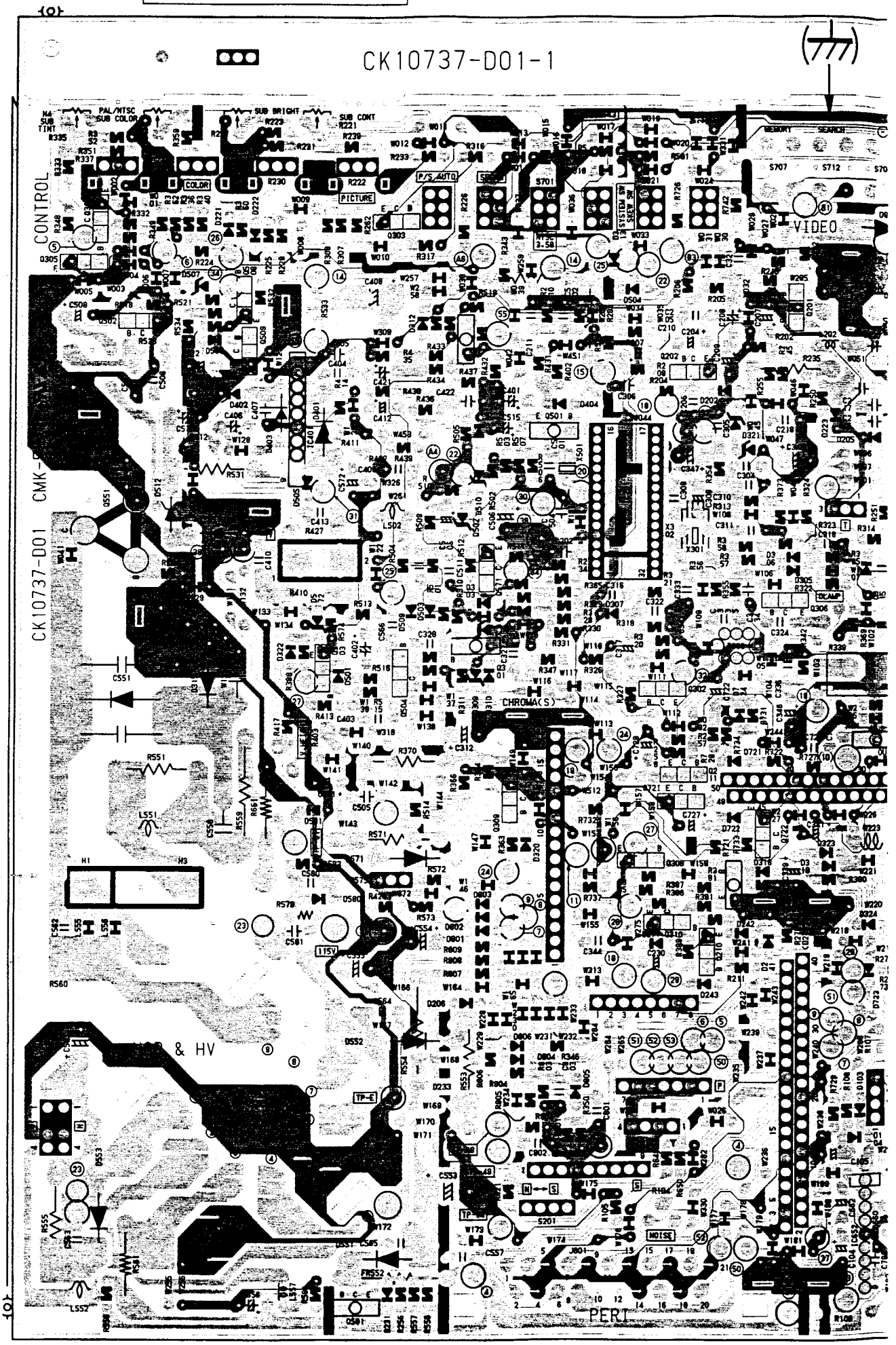

CK PATTERN

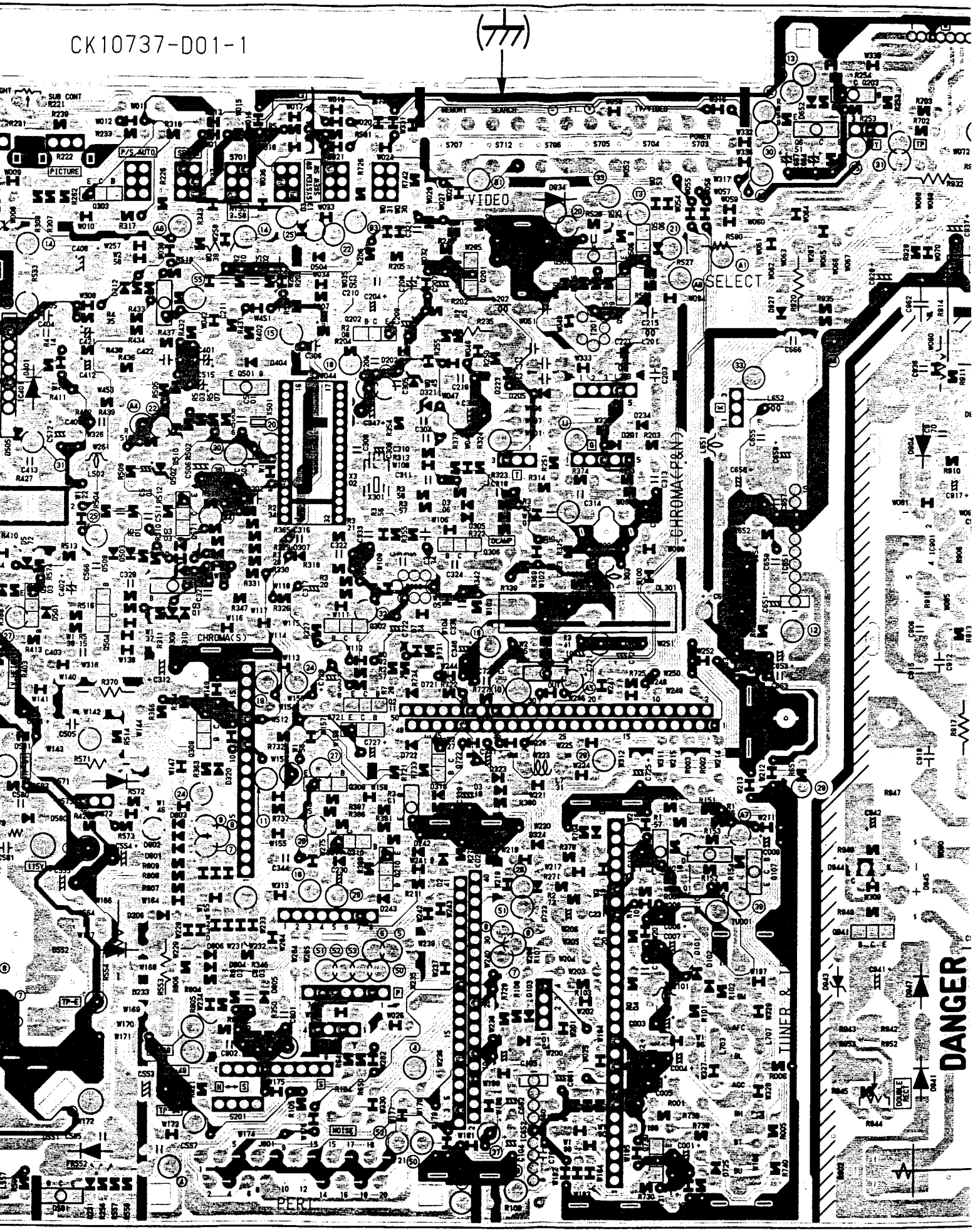

③ ④

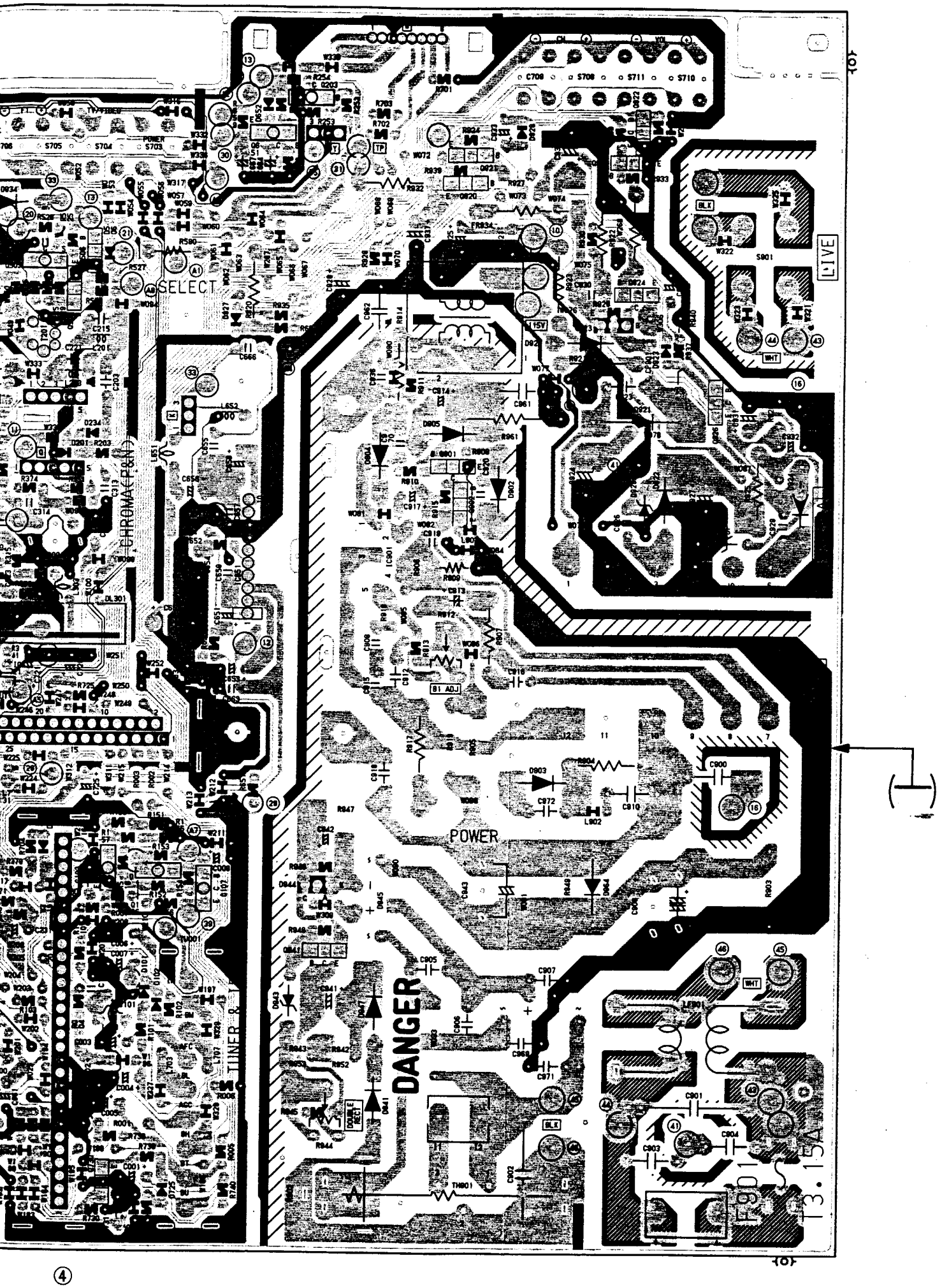
SELECT
CHROMA (P&N)
TUNER & T
POWER
DANGER
LIVE
BLK
WHT
B1 ADJ
DOUBLE RECT
F901
T3.15A

④

MAIN PCB SCHEMATIC DIAGRAM

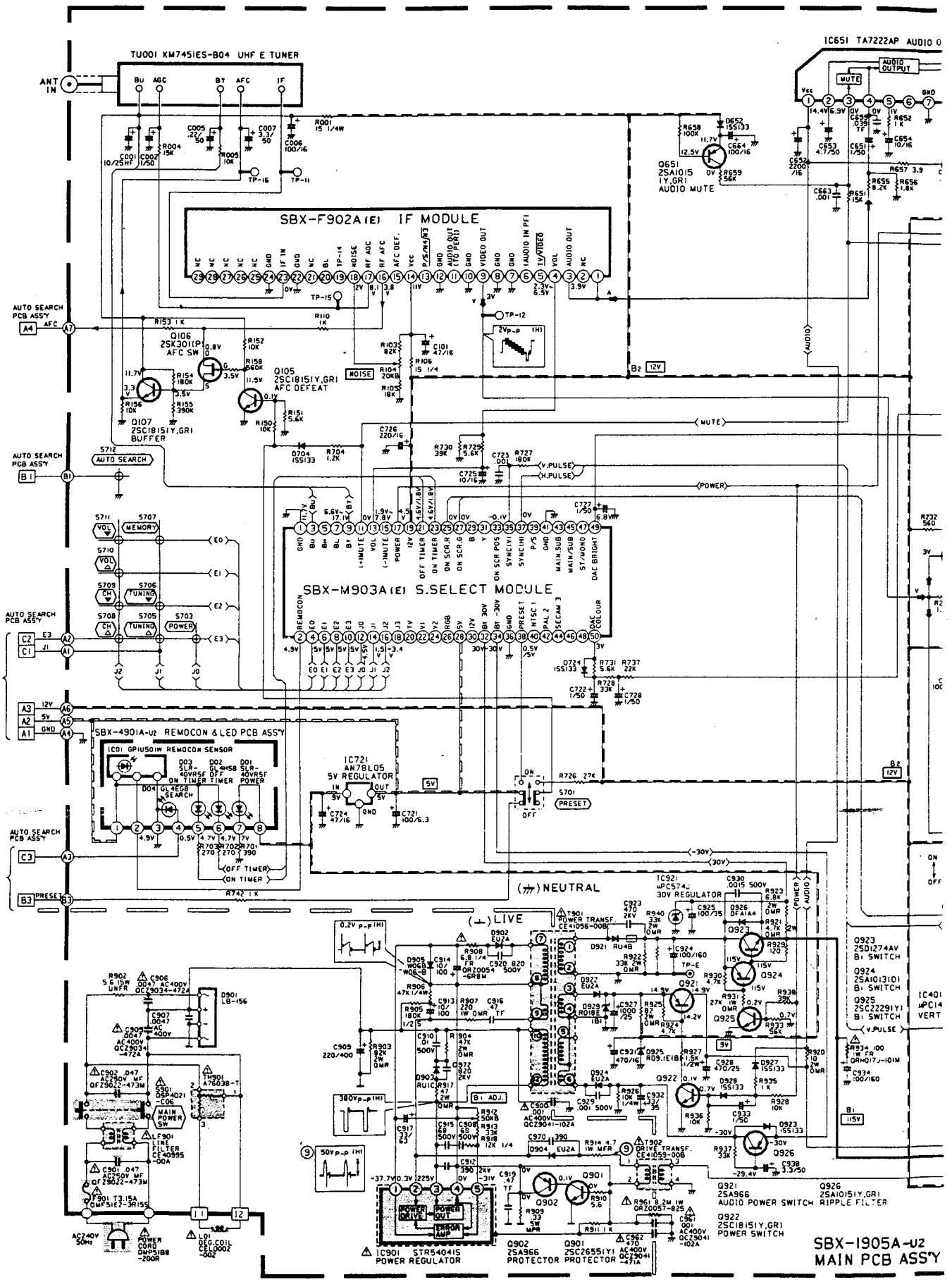

DIAGRAM

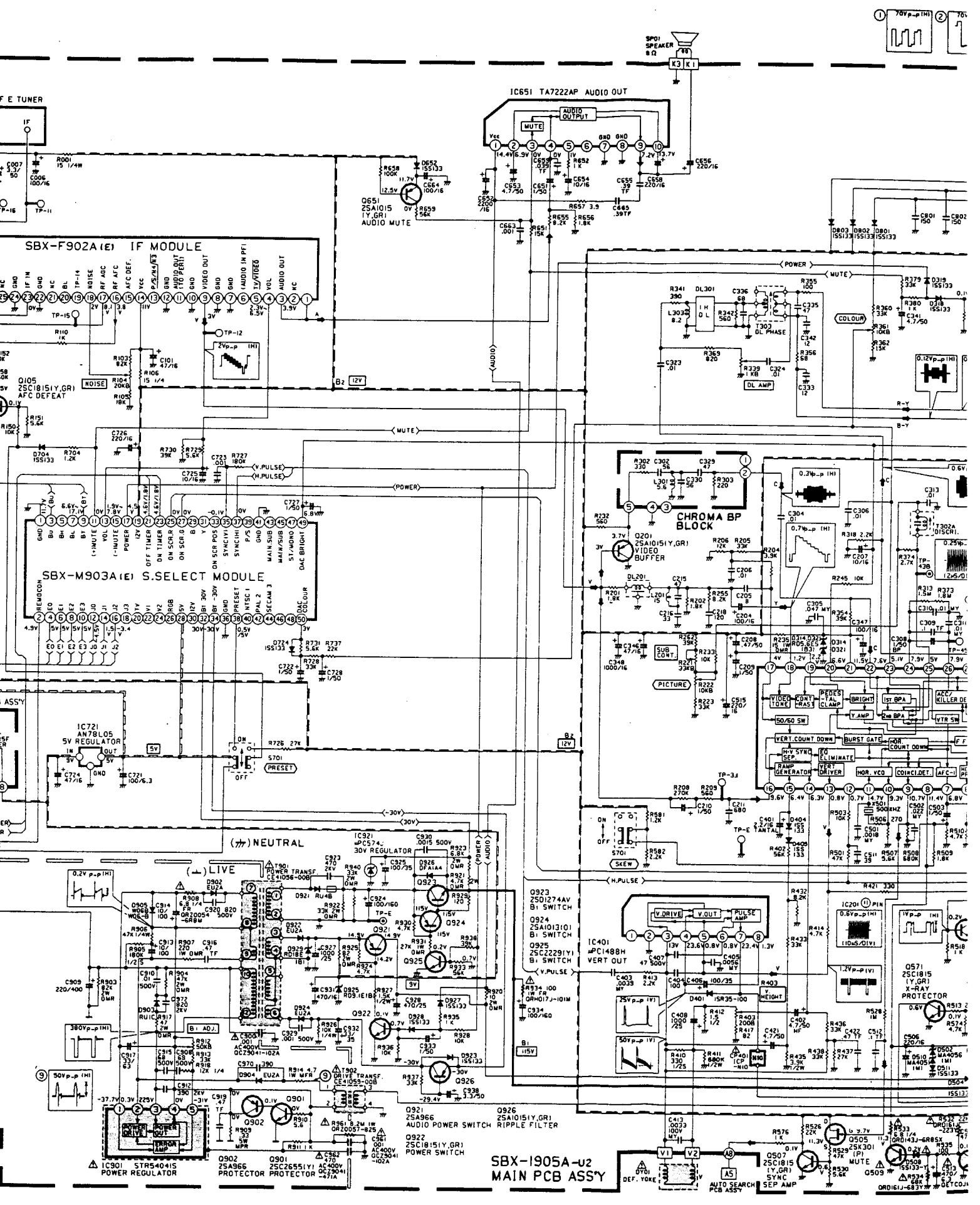

SBX-F902A(E) IF MODULE
SBX-M903A(E) S.SELECT MODULE
IC651 TA7222AP AUDIO OUT
Q651 2SA1015 (Y,GR) AUDIO MUTE
Q105 2SC1815(Y,GR) AFC DEFEAT
CHROMA BP BLOCK
Q201 2SA1015(Y,GR) VIDEO BUFFER
IC721 AN78L05 5V REGULATOR
NEUTRAL
LIVE
IC921 μPC574J 30V REGULATOR
Q923 2SD1274AV B1 SWITCH
Q924 2SA1013(O) B1 SWITCH
Q925 2SC2229(Y) B1 SWITCH
IC401 μPC1488H VERT OUT
Q571 2SC1815 (Y,GR) X-RAY PROTECTOR
Q921 2SA966 AUDIO POWER SWITCH
Q926 2SA1015(Y,GR) RIPPLE FILTER
Q922 2SC1815(Y,GR) POWER SWITCH
IC901 STR54041S POWER REGULATOR
Q902 2SA966 PROTECTOR
Q901 2SC2655(Y) PROTECTOR
SBX-1905A-U2 MAIN PCB ASS'Y
Q507 2SC1815 (Y,GR) SYNC SEP AMP
Q505 2SK301 (P) MUTE
AUTO SEARCH PCB ASS'Y
DEF. YOKE

⑤ ⑥

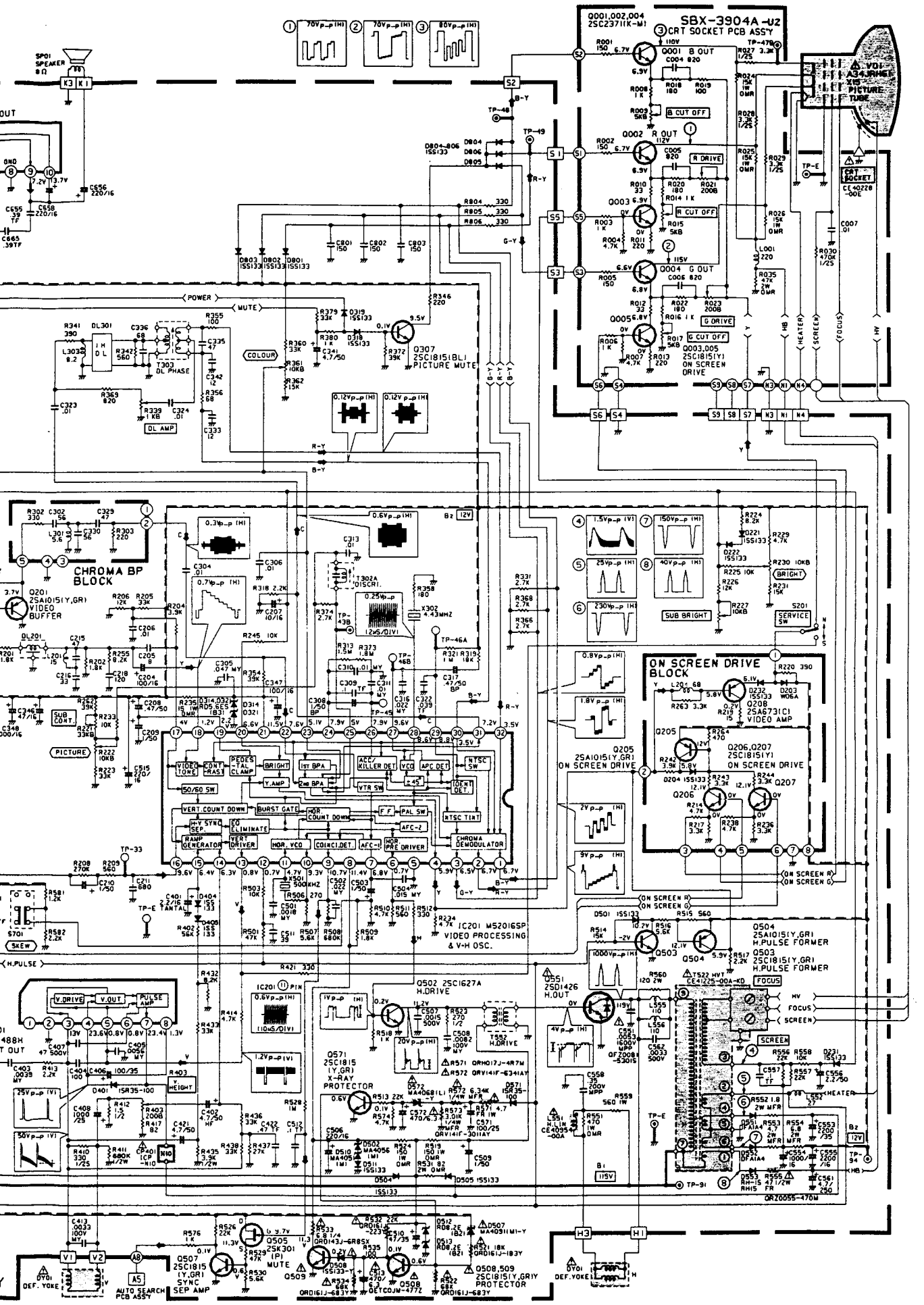
SBX-3904A-U2
CRT SOCKET PCB ASS'Y
Q001,002,004 2SC2371(K-M)
Q001 B OUT
Q002 R OUT
Q003
Q004 G OUT
Q005
Q003,005 2SC1815(Y) ON SCREEN DRIVE
Q307 2SC1815(BL) PICTURE MUTE
CHROMA BP BLOCK
Q201 2SA1015(Y,GR) VIDEO BUFFER
ON SCREEN DRIVE BLOCK
Q208 2SA673(C) VIDEO AMP
Q205 2SA1015(Y,GR) ON SCREEN DRIVE
Q206,Q207 2SC1815(Y) ON SCREEN DRIVE
IC201 M52016SP VIDEO PROCESSING & V-H OSC.
Q502 2SC1627A H.DRIVE
Q551 2SD1426 H.OUT
Q504 2SA1015(Y,GR) H.PULSE FORMER
Q503 2SC1815(Y,GR) H.PULSE FORMER
Q571 2SC1815 (Y,GR) X-RAY PROTECTOR
Q505 2SK301 (P) MUTE
Q507 2SC1815 (Y,GR) SYNC SEP AMP
Q508,509 2SC1815(Y,GR)Y PROTECTOR
AUTO SEARCH PCB ASSY
DEF. YOKE
SPOI SPEAKER 8Ω
POWER
MUTE
COLOUR
DL AMP
SUB CONT.
PICTURE
SKEW
H.PULSE
SUB BRIGHT
BRIGHT
SERVICE SW
SCREEN
FOCUS
HEATER
HV
SCREEN
ON SCREEN R
ON SCREEN G
CRT SOCKET
CE40228-00E
V01 A34JRHET X15 PICTURE TUBE
T303 DL PHASE
T302A DISCRI.
T522 HVT CE41225-00A-KD
T552 H.DRIVE
X302 4.43MHZ
X501 500KHZ
X501 500KHZ
VIDEO TONE
CONT-RAS
PEDES-TAL CLAMP
BRIGHT
1ST BPA
2ND BPA
ACC/KILLER DET
VCO
APC DET
NTSC SW
IDENT DET.
Y.AMP
VTR SW
VERT.COUNT DOWN
BURST GATE
HOR. COUNT DOWN
F.F.
PAL SW
NTSC TINT
H-V SYNC SEP.
EQ ELIMINATE
RAMP GENERATOR
VERT DRIVER
HOR. VCO
COINCI.DET.
AFC-1
AFC-2
HOR. PRE DRIVER
CHROMA DEMODULATOR
V.DRIVE
V.OUT
PULSE AMP
V.HEIGHT
DYOI DEF. YOKE

■ ALIGNMENT LOCATION

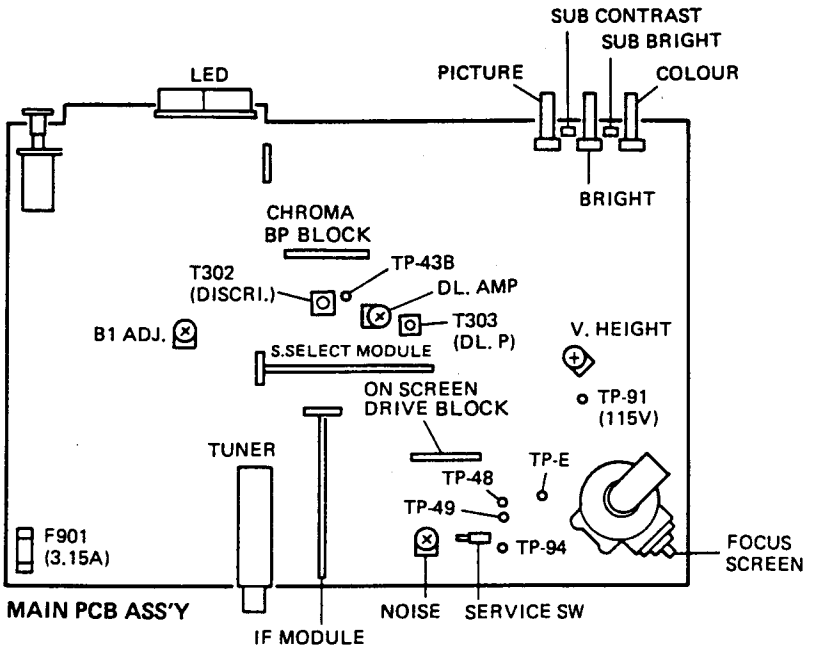

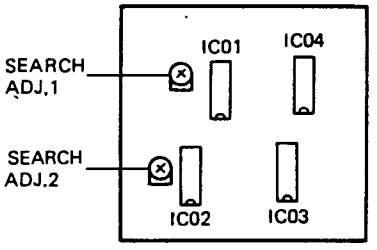

AUTO SEARCH PCB ASS'Y

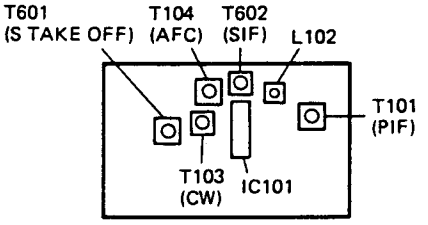

IF MODULE PCB ASS'Y

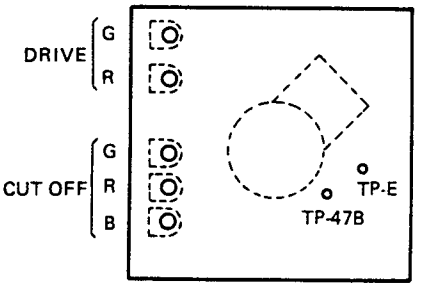

CRT SOCKET PCB ASS'Y

Basing of Transistor & ICs

2SA1015(Y,GR)
2SC1815(Y,GR)
2SC1815(BL)
2SC1627A

2SA1013(O)
2SA966
2SC2655(Y)
2SC2229(Y)

2SK301(P)

2SD1274AV

2SC2371(K-M)

2SD1426

IC
AN78L05

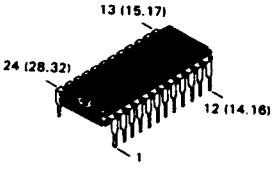

IC
M52016SP

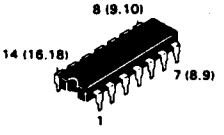

IC
TC4066BP
MB3614
TC74HC86P
TC74HC109P

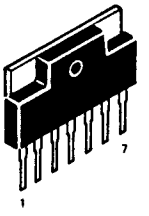

uPC1488H

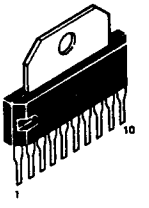

IC
TA7222AP

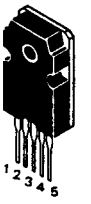

IC
STR54041S

AUTO SEARCH SCHEMATIC DIAGRAM

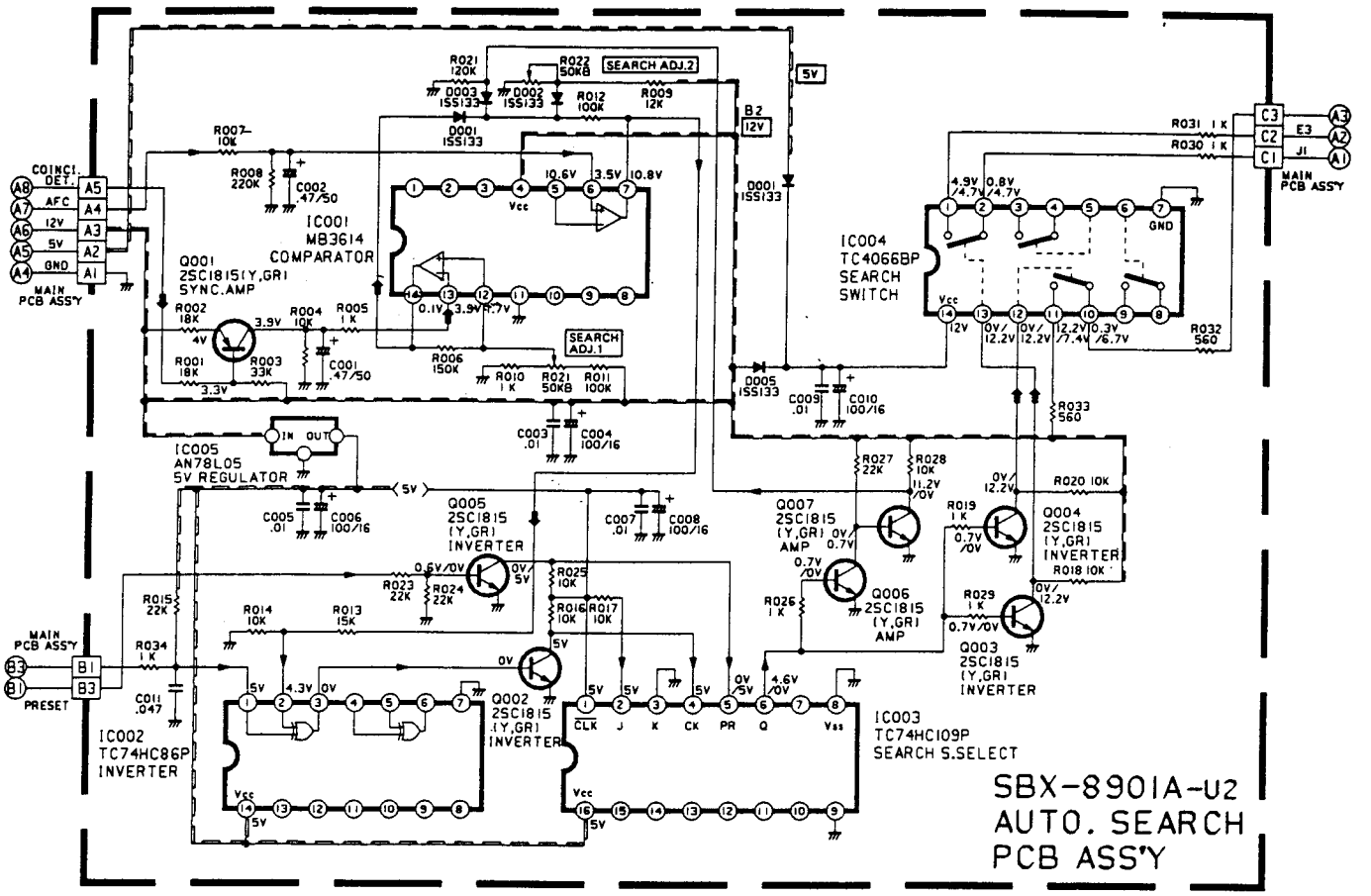
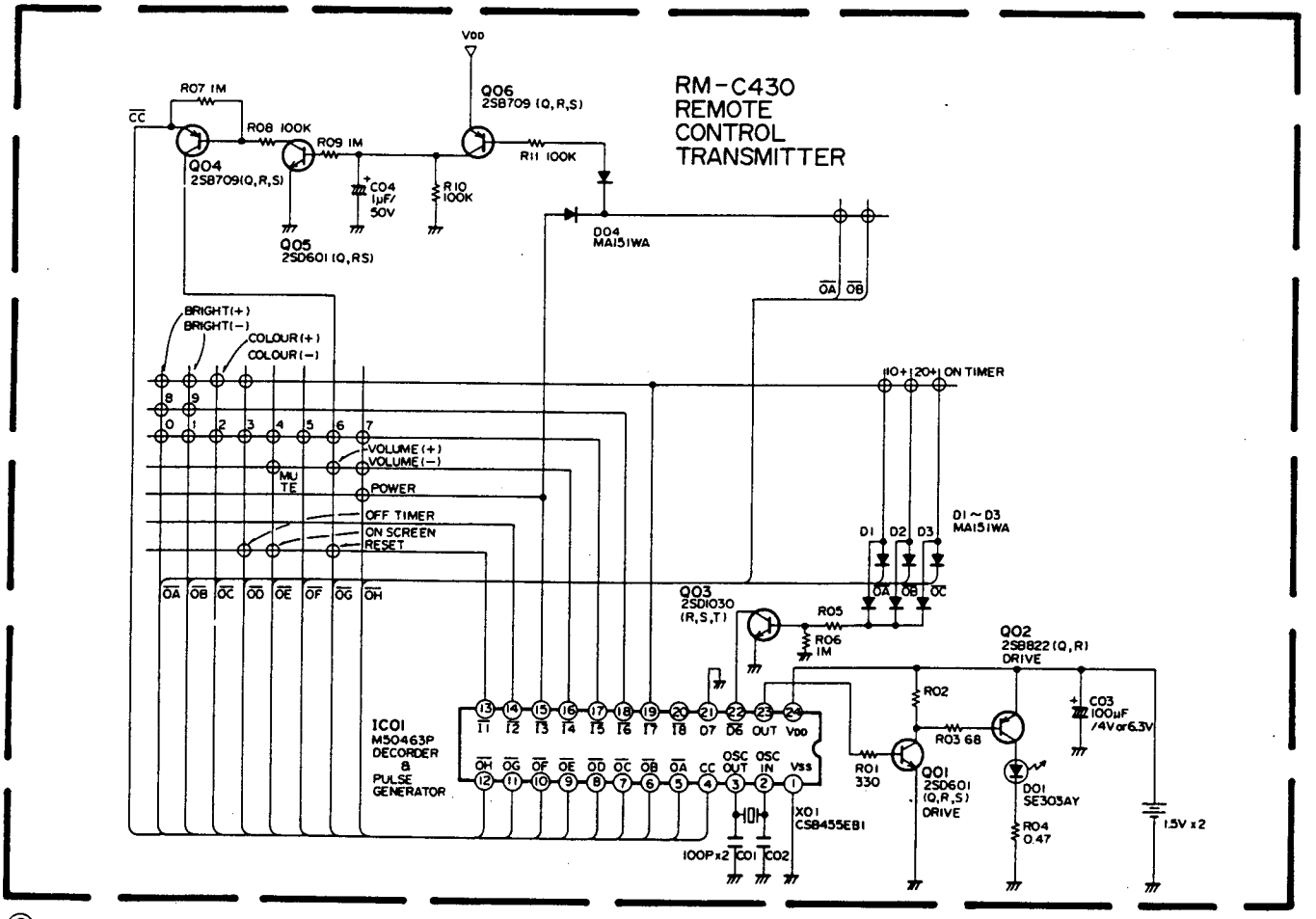
RM-C430 SCHEMATIC DIAGRAM